GEND 040
Distribution Category: UC-78
TMI Supplement

GEND--040

DE84 014163

FINAL REPORT ON THE IN SITU TESTING OF ELECTRICAL COMPONENTS AND DEVICES AT TMI-2

Florante T. Soberano

Published June 1984

United Engineers & Constructors, Inc.
Philadelphia, Pennsylvania

Prepared for the
U.S. Department of Energy
Three Mile Island Operations Office
Under DOE Contract No. DE-AC07-76IDO1570

SUMMARY

A total of 88 electrical components and devices were in situ tested. Of these, 11 totally failed and 21 suffered degradation that varied from mild to severe. The equipment that failed or incurred severe degradation was located in areas of known environmental extremes. Several motor operated valves in the Reactor Building basement failed because of submersion in water. Others severely degraded from contamination tracking, resulting in the alteration of their circuit electrical characteristics--a circumstance that could compromise their designed function. One backup oil lift pump motor for a reactor coolant pump motor, although located well above the Reactor Building basement high water mark, failed because of a break in its armature and field circuits; this failure was surmised to be a result of corrosion. The limit switch of a Class 1E solenoid valve likewise failed due to moisture intrusion.

Components that noticeably degraded exhibited anomalies, likely due to the incursion of moisture, that varied from high capacitance to increased circuit resistance. The effect of the other degenerating conditions that existed during the accident, such as high temperature, high radiation levels, and the hydrogen burn, could not be evaluated individually or synergistically.

FOREWORD

The testing of electrical components as presented in this report is one of three tasks of a major program managed and directed by EG&G Idaho, Inc. to assess the survivability of instrumentation and electrical components located in the Reactor Building of Three Mile Island Unit 2. The other two tasks are Instruments, directed by R. D. Meininger, EG&G Idaho, and Cables/Connections, directed by C. P. Cannon, Hanford Engineering Development Laboratory. Overall management and technical directions are provided by R. D. Meininger as a technical coordinator to the Data Acquisition Program of the Technical Information and Examination Program, which is managed by EG&G Idaho at Three Mile Island.

ACKNOWLEDGMENTS

The author gratefully acknowledges H. J. Helbert and C. G. Cooper (retired), EG&G Idaho, Inc., and L. A. Hecker, formerly with EG&G Idaho, Inc., and now with Illinois Power Co., for coordinating the tests and data acquisition; L. A. Mares, D. S. Prescott, and J. Thomas, EG&G Idaho, Inc., for supervising the tests; R. D. Meininger and L. J. Ball, EG&G Idaho, Inc., for their support and efforts as program technical coordinators in making the in situ testing program a success; and J. H. Zdzieborski, United Engineers & Constructors, Inc., for his technical review of the report and for his valuable suggestions. Special thanks to C. J. Hess, EG&G Idaho, Inc., for her thorough technical editing of the report.

CONTENTS

ABSTRACT ii

SUMMARY iii

FOREWORD iv

ACKNOWLEDGMENTS v

INTRODUCTION 1

TESTING 3

DATA ANALYSIS APPROACH 5

DETAILED DATA ANALYSIS 9

Level Switches AH-LS-5006, AH-LS-5007, and AH-LS-5008 9

Damper Limit Switches 12

Lube Oil System Instruments of the Reactor Coolant Pump Motors 15

Pressure Switches NM-PS-1454, NM-PS-4174, and NM-PS-4175 19

Vibration Switches RC67-VS1, RC67-VS2, RC67-VS3, and RC67-VS4 23

Solenoid Valves 24

AH-V6 and AH-V74 24
AH-EP-5037 and AH-EP-5040 27

Power-operated Relief Valve RC-R2 28

Reactor Coolant Pump Motors 35

Backstop Lube Oil Pump Motors of the Reactor Coolant Pump Motors 45

Backup Oil Lift Pump Motors of the Reactor Coolant Pump Motors 46

Reactor Building Air Cooling Fan Motors 51

Motor Operated Valves 58

CA-V1 63
CA-V4A 65
CA-V4B 66

CF-V1A 66
CF-V115 67
DC-V114 68
DH-V1 68
DH-V2 69
DH-V171 70
IC-V1A 70
IC-V1B 71
MU-V1A 71
MU-V1B 72
MU-V2A 72
MU-V2B 73
NS-V100 74
RC-V1 (Non-Class 1E) 74
WDL-V7 (Non-Class 1E) 75
WDL-V22 75
WDL-V126 (Non-Class 1E) 76
WDL-V127 (Non-Class 1E) 76
WDL-V271 76
Evaluation Summary 77

CONCLUSIONS 78

REFERENCES 80

APPENDIX A--DATA FROM POSTDECONTAMINATION IN SITU TESTS OF ELECTRICAL COMPONENTS AND DEVICES A-1

FINAL REPORT ON THE IN SITU TESTING OF ELECTRICAL COMPONENTS AND DEVICES AT TMI-2

INTRODUCTION

In situ testing of electrical components and devices in Three Mile Island Unit 2 (TMI-2) started in mid-1980. The program was conceived with two objectives: a) to determine the electrical status of selected units, and b) to retest these units periodically and after changes occur in their operating environment, such as by Reactor Building decontamination. Retesting is important to determining the degradation patterns of these units as functions of time and determining the effects of the operations that changed the building environment. The in situ testing results served as the principal basis for selecting the components to be removed for examination.

The testing, which involved the measurement of electrical parameters from points outside the Reactor Building, got underway in full scale in late 1981. Initially, 48 electrical components and devices were considered for testing. Because data and information on the condition of the reactor were scanty at that time and there were many unknown elements affecting reactor safety, General Public Utilities Nuclear Corporation (GPU Nuclear) disapproved the testing of any component considered to have any bearing on reactor safety. Only 36 components were approved and tested before Reactor Building gross decontamination. As more data on the reactor condition became known, the constraints placed on components to be tested were relaxed, and additional components were added into the list. A total of 88 components underwent testing.

Of the 88 components tested, 29 are Class 1E units, although most of them are not qualified for a loss-of-coolant accident (LOCA). The Class 1E components comprise motor operated valves, solenoid valves, and the five Reactor Building air cooling fan motors. All of these units operated during and after the accident. While some of them stopped functioning after the accident, others have been operating continuously since then. Several of the components, although classified as non-Class 1E, performed

vital operations during the accident recovery. Examples of these units are the reactor coolant pump motors. The motors operated during the accident recovery to provide the motive force of the reactor coolant, an operation that was necessary to achieve the conditions required to effect natural convection cooling of the reactor. Other components also operated to support the operation of the reactor coolant pump motors.

During and after the accident, the components were exposed to environmental extremes, such as high temperature, high radiation exposure and dose, high humidity, and in some cases submersion and hydrogen burn. Following the accident, only a few of these units were operated. Other components that would have been needed for the long-term recovery were not operated because of the suspected environmental extremes they were exposed to and their unknown condition.

TESTING

Testing of the incontainment electrical components and devices was performed outside the Reactor Building. Depending upon accessibility of the test point and ease of testing, the test was carried out either in the electrical penetration outer terminal box or in a termination cabinet closest to the penetration.

The testing was performed by GPU Nuclear maintenance electricians and instrument technicians, using GPU Nuclear-approved procedures. The work was implemented following a GPU Nuclear format, initially established by a job ticket which was later superseded by a unit work instruction (UWI). In either format, the test procedure forms part of the document. Before the testing can be implemented, the job ticket or UWI is cycled through a GPU Nuclear approval process. The approved document is good for one-time use. Following completion of the test, the job ticket or UWI is closed out; a retest would require a new job ticket or UWI, which also would be recycled for approval.

The in situ test consisted of two types of tests: static and dynamic. The static test is an examination of the component without applying power. This test includes loop inductance, loop capacitance, loop equivalent series resistance, loop real resistance, insulation resistance, and time domain reflectometry (TDR) measurements. The dynamic test involves operating the components while measuring their operating parameters, including starting or inrush and holding or running currents.

The static test measurements were taken on the device in its "as found" state and, if alteration was possible, in its altered state. Effective inductance, effective capacitance, and equivalent series resistance measurements were taken at frequencies of 120 Hz and 1 kHz. When more versatile test instruments became available, the two-frequency measurement was changed by a frequency sweep method from 120 Hz to 10 kHz. Data from this latter measurement are recorded in a magnetic tape. A Hewlett-Packard 85 computer was used for reducing and plotting the data. The TDR measurement was initially made using a Tektronix 1502, a standard

low-voltage time domain reflectometer. While the technique was appropriate in some cases, it was later changed to make use of a device that put out a high voltage pulse incident signal. The higher voltage signal was necessary to override the induced electrical noise that existed on the circuit under test.

In all of the tests, electrical noise was always the first parameter to be measured. Electrical noise, whether induced or direct coupled voltage resulting from leakage current from adjacent circuits, affects the measured data in many ways. If the noise level is high, it renders the conventional measurement techniques unsuitable. Varying and meaningless test data are the result. As a more subtle effect, electrical noise will cause data to be inconsistent.

Because of the many unique situations in TMI-2, testing methods differed from component to component. For example, in the reactor coolant motor feeder circuit, in which the rated voltage is 6900 volts, every connection is tightly insulated and the conductors are inaccessible unless the insulation is damaged. To access the circuit, a grounding buggy was used.

DATA ANALYSIS APPROACH

The approach taken to evaluate the condition of the components tested was to consider each component as a network comprising resistance (R), inductance (L), and capacitance (C) elements and having an impedance

$$Z = R + jX \tag{1}$$

where

R = network equivalent series resistance

X = network equivalent series reactance.

The pattern of how the R and X quantities vary with frequency is then compared with baseline data. The baseline data are obtained during startup or measured from identical devices determined to be normal.

Depending upon the complexity of the network, both the equivalent series resistance and the equivalent series reactance of the network are functions of the various elements' capacitance, inductance, leakage resistance, and ohmic resistance and frequency. Whether the circuit is capacitive or inductive, the circuit's built-in inductance or capacitance and real resistance are fixed. Inductance is primarily the function of the number of coil turns and permeability of the magnetic circuit. In the case of the interconnecting cable, inductance is a function of the size, geometry, and length of the cable wires. Real resistance is a function of the conductor material resistivity and the conductor size and length; the real resistance can be measured independently. Leakage resistance, unless the insulation is broken down, has a high value and does not affect the network's impedance. Capacitance, therefore, is the only element that could alter the network's impedance.

Capacitance is dependent upon geometry and the dielectric material's dielectric constant. Water, by virtue of its high dielectric constant, is generally regarded as the principal contributor when a high capacitance is detected.

The LCR bridge used in the test measures both the equivalent series resistance R and the equivalent series reactance X. Depending on whether the reactance is inductive or capacitive, the instrument will then determine the corresponding circuit effective inductance or capacitance.

Typically, an RLC network with a small value of capacitance will have an effective inductance that starts up at a certain value at very low frequency. As the frequency is increased, the inductance decreases until it reaches and flattens out at a low point after which it gradually and then rapidly increases to a peak point. The inductance then decreases rapidly until the circuit becomes capacitive. The circuit remains capacitive as the frequency is increased further. A typical pattern of inductance is shown in Figure 1. The pattern of the network effective inductance is dictated by the capacitance in the circuit. As some of the network distributed capacitance is increased, the circuit resonant frequency decreases, hence the lower the frequency at which maximum circuit inductance occurs. The equivalent series resistance also follows a pattern in which the value starts low at low frequency, increases as the frequency is increased until it reaches a peak point, and then gradually decreases as the frequency is further increased.

In analyzing the data, the equivalent circuit of the component tested is first approximated, and then the equivalent series resistance and equivalent series reactance expressions are derived. Parameters measured from dc measurements and parameters typical of the size and type of the device are used as baseline data and are plugged into the derived expressions. With the use of a Hewlett-Packard 25 computer system, the network equivalent series resistance and effective inductance or capacitance are calculated and plotted for different values of the assumed stray capacitance at frequencies of 120 Hz to 10 kHz. The calculated equivalent series resistance and reactance are then compared to the obtained data. The process is repeated for different values of the stray capacitances until the calculated and measured data at both measurement frequencies are in close agreement. Whenever the assumed values of the stray capacitances become unrealistically high, the approximated configuration of the network is changed and the process is repeated. The

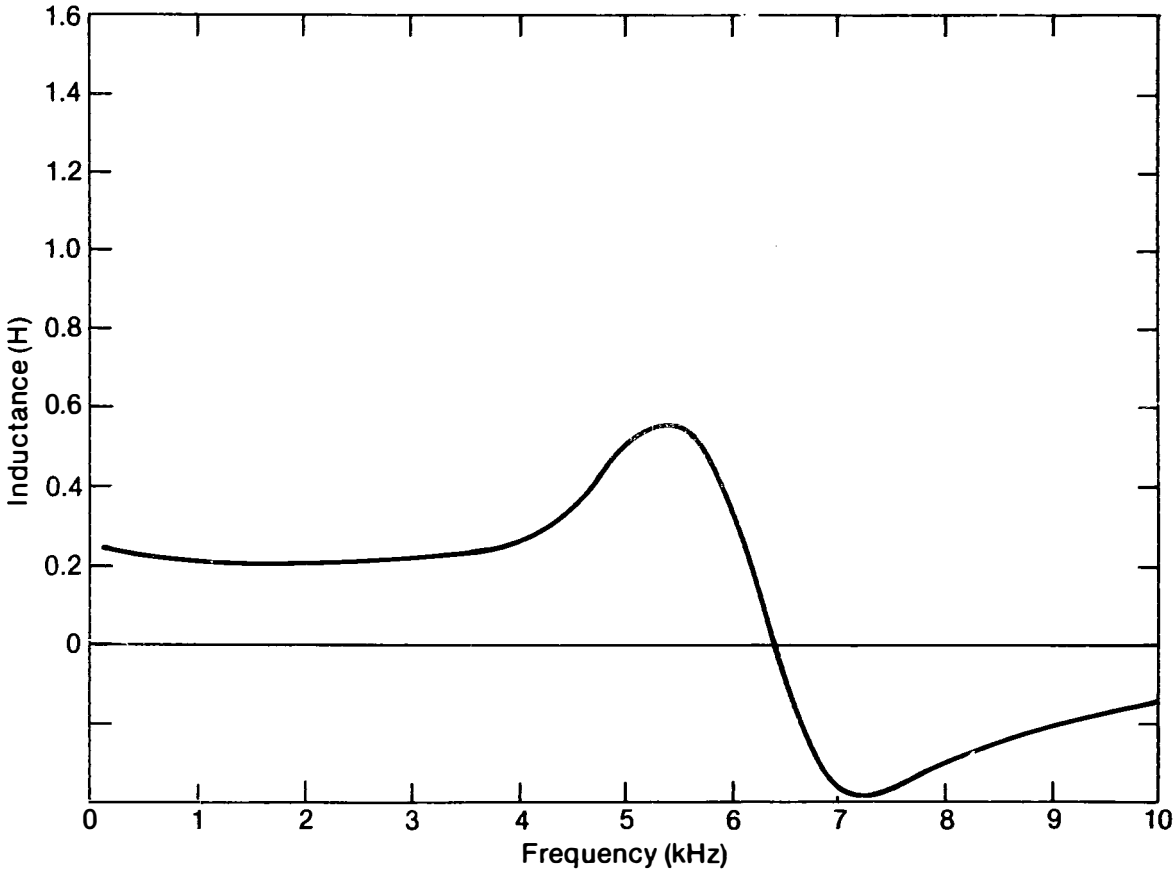

INEL 4 4415

Figure 1. A typical pattern of circuit inductance as a function of frequency. The negative inductance means the circuit is capacitive.

calculated circuit equivalent series resistance and effective inductance or capacitance are then assimilated with the other data to determine the validity of the initial assumptions. The mechanism by which the stray capacitance got into the network is then analyzed, and its overall impact on the circuit function is evaluated.

Appendix A summarizes the results of the in situ test performed after the Reactor Building gross decontamination. A description of each component and device and the analyses of the test data are presented in this report. Analysis of test data obtained before gross decontamination was published in GEND-INF-034, Testing and Examination of TMI-2 Electrical Components and Discrete Devices.[1]

DETAILED DATA ANALYSIS

Following is an analysis of the findings from in situ tests of the various components and devices in TMI-2. Appendix A is a detailed table of postdecontamination in situ test data for the electrical components and devices.

Level Switches AH-LS-5006, AH-LS-5007, and AH-LS-5008

Level switches AH-LS-5006, AH-LS-5007, and AH-LS-5008 are used to detect leaks in the cooling coil of Reactor Building air coolers AH-C-13B, AH-C-13C, and AH-C-13D, respectively. They furnish an alarm to the control room when they detect a high water level in their respective air cooler sumps.

The switches are Delaval GEMS Model LS 1950. Each switch consists of a magnet-equipped, stainless steel ball float surrounding a vertically mounted reed switch inside a metal tube (see Figure 2). The metal tube serves as the travel guide of the float. The switches are non-Class 1E and are industrial grade units.

The devices were tested before and after gross decontamination. In predecontamination testing, AH-LS-5007 and AH-LS-5008 were normal in all aspects while AH-LS-5006 exhibited an elevated real resistance of 554 ohms and a capacitive dip at the device end of its circuit TDR signature, as seen in Figure 3. This anomaly of AH-LS-5006 was attributed at the time to water in the circuit, specifically in the device proper or very close to the device. Postdecontamination testing revealed basically the same abnormality but with some changes.

AH-LS-5007 remained normal, as it performed in the initial test. In contrast, AH-LS-5008 exhibited a slight increase in its loop resistance from its initial value of 1.81 ohms to 12.2 ohms. The change was also apparent in the TDR trace, characterized by a less rapid decay at the end of the cable. The rise in resistance was suspected to be due to oxide buildup on the switch contact or on the field wire-instrument lead wire connection. The anomaly did not affect the device function.

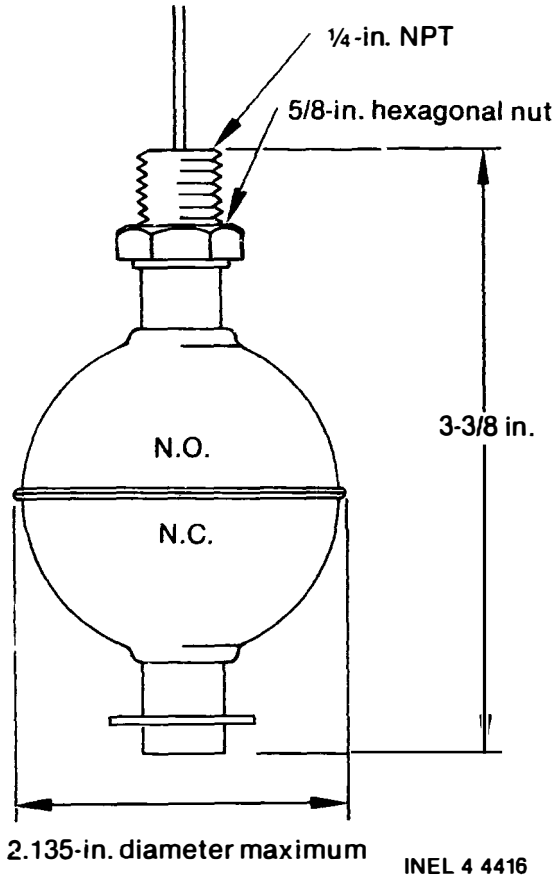

Figure 2. Level switch Delaval GEMS Model LS 1950.

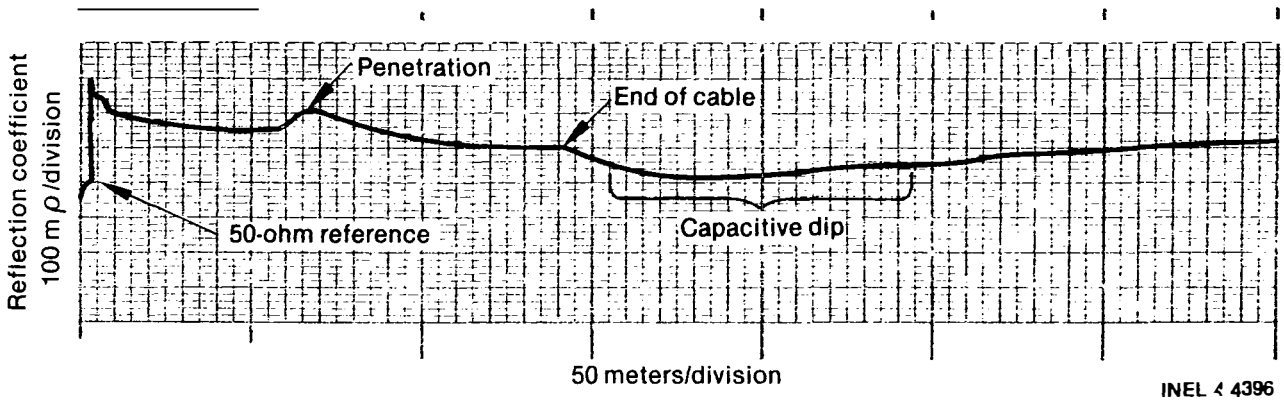

Figure 3. Predecontamination TDR signature of the circuit of AH-LS-5006.

As in the predecontamination test, AH-LS-5006 was still characterized by the high circuit resistance, which further increased in postdecontamination testing to 560 ohms. In the latter test, however, the switch exhibited a pattern devoid of the capacitive dip at the end of the cable termination, an indication that the wet termination dried before decontamination (see Figure 4). The anomaly, likewise, did not affect the device function.

Although the abnormalities of AH-LS-5006 and AH-LS-5008 did not affect their functions, their occurrence signifies failure of the devices if the point of high resistance is in the device. The switches are supposed to be hermetically sealed.

The cause of the failure of the two level switches can only be speculated, but it may be related to the accident. The devices are designed to operate in a wet, 400°F environment. During and after the accident, the radiation level was high and temperatures increased. The high radiation level persisted but the temperature decreased to lower than normal. The high radiation level may have deteriorated the device stem potting material and reed switch sealing material, causing them to crack and shrink and allowing moisture into the reed switch internal. If the point of fault is external to the reed switch, the extremely wet Reactor Building environment that existed since the accident could have caused oxidation to the circuit terminals.

Damper Limit Switches

Limit switches AH-KS-5000 through AH-KS-5004 are the limit switches of the gravity inlet dampers of Reactor Building air cooling fans AH-E-11A through AH-E-11E. Each switch is mounted on its associated damper and actuated by a control rod, which is contacted by one of the damper blade crank arms as the arm approaches the closed position. The switches are Allen-Bradley Model 802T-ATEW-3, having a single pole, single throw, normally closed (NC) contact configuration.

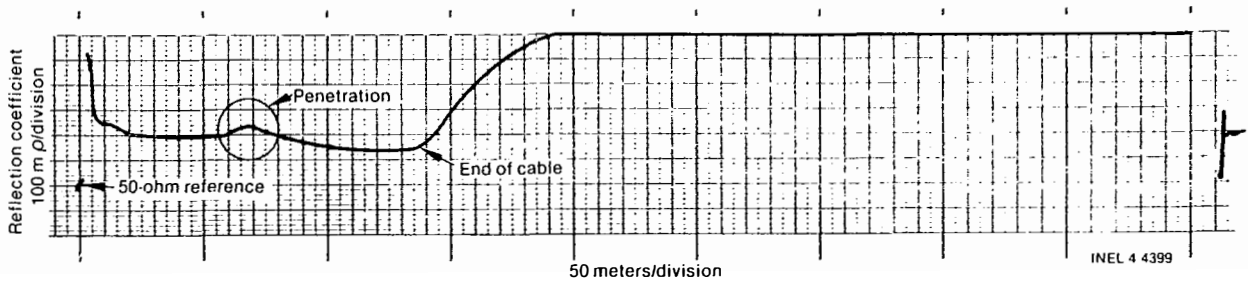

Figure 4. Postdecontamination TDR signature of the circuit of AH-LS-5006.

The switches provide control room indication of each damper's fully closed position. Each is powered by the control power of its associated air cooling fan. Because the devices are powered by nuclear safety related circuits, they are of the same qualification.

The switches were tested in conjunction with the Reactor Building air cooling fans. The test involved taking static test measurements with the air cooling fans off and on. Tests with the fans on, however, did not provide any more data because the normally free-swinging dampers were evidently stuck. Normally the dampers would have swung open when their associated fans were on and closed when the fans were off. But regardless of the status of the associated fans, the dampers would not change state, as indicated by the corresponding limit switches. During subsequent Reactor Building entries, technicians verified the position and condition of the dampers, finding some stuck and others operating sluggishly. Nonetheless, the electrical condition of the limit switches appeared to be normal. The circuit resistance and inductance of AH-KS-5000, AH-KS-5002A, and AH-KS-5003 are consistent with those expected based on the length of the interconnecting cables. The same is true with the capacitance of the circuits of AH-KS-5001 and AH-KS-5004. The TDR traces showed no evidence of cable anomaly. Their insulation resistances are more than 10^8 ohms, an indication that their insulation is sound.

Describing the physical condition of the limit switches, the decontamination team said they looked as if they would break if they were moved. The team observed a significant amount (as much as 1/8 in. thick) of material deposits--perhaps sodium--on all of the switches. Limit switches AH-KS-5000, AH-KS-5001, and AH-KS-5002A were the most contaminated.

No definite conclusions about the condition of the limit switches were drawn from the test. But visual observations indicate the switches may be inoperative and stuck in fixed positions by material deposits.

Lube Oil System Instruments of the Reactor Coolant Pump Motors

Each reactor coolant pump motor has several digital instruments to monitor the condition of its lube oil system. These instruments, comprising level switches, pressure switches, and flow switches, provide startup control permissives for the motor and furnish input to the balance of plant computer for data logging.

Only the instruments providing computer input were tested, specifically two level switches, two flow switches, and one pressure switch for every reactor coolant pump motor. Figure 5 is a typical wiring diagram for a lube oil instrument group of a reactor coolant pump motor.

The two level switches monitor the oil level in the upper oil reservoir of the reactor coolant pump motor. One switch trips on low level and the other trips on high level. The instruments are Static-O-Ring (SOR) pressure switches with very low ranges. Each instrument has two sets of single pole, double throw (SPDT) miniature microswitches. Only one set of switches was used in the plant. Except for that of reactor coolant pump motor RC-P-2B, the low oil level circuit used an NC contact while the high oil level circuit used a normally open (NO) contact. The RC-P-2B motor low oil level switch used an NO contact.

The flow switches monitor the oil flow through the oil cooler and from the backstop lube oil pump. The instruments performing the respective functions are the McDonnell Model FS4-3 and Miller Model FS4-1. Both devices incorporate one SPDT switching element that is actuated by a paddle device. On all four reactor coolant pump motors, the NC contact of the switching elements were used for the data logging function. However, the FS4-3 units are designed to have their switching elements in the actuated state in a no-flow condition; hence, their NC contacts are actually normally open. The FS4-1 units are designed with their switching elements in their normal state.

The pressure switch monitors the oil lift pump discharge pressure. The device, Barksdale Model 9048-4, consists of an SPDT switching element actuated by a sealed piston. Its NC contact is used for the function.

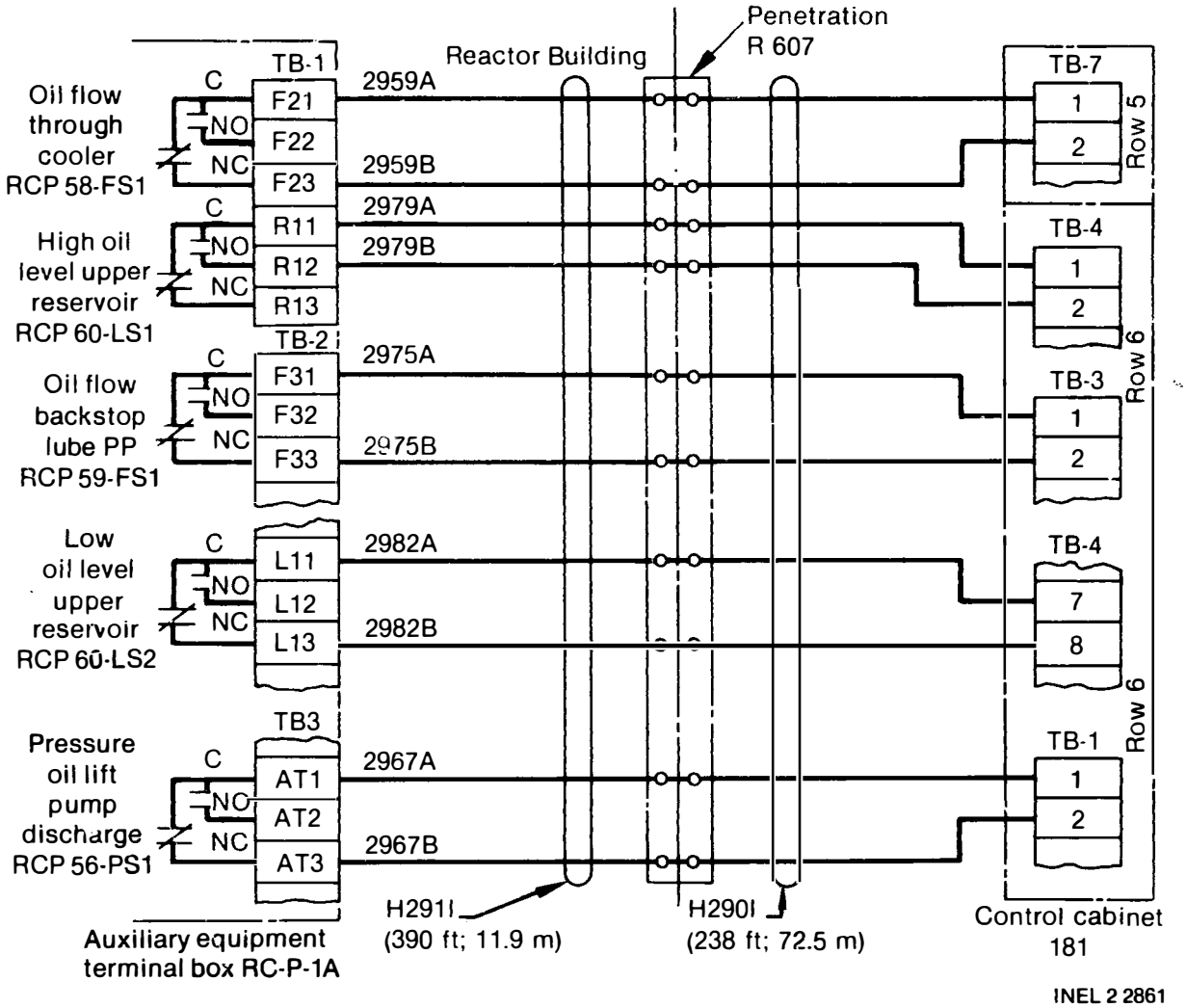

Figure 5. RC-P-1A lube oil instruments interconnection wiring diagram.

Each set of instruments is interconnected to the computer by six-pair, twisted and shielded-in-pair cables. The conductors are seven-strand, AWG 16, soft-drawn copper insulated by silicon rubber. The cable is jacketed by braided asbestos. The cables in and out of the Reactor Building are interconnected through electrical penetration R607 by means of connectors.

In the early stage of the in situ test program, only the instruments corresponding to RC-P-1A were considered for testing. These instruments were tested before gross decontamination. The results of the initial test indicated several anomalies, both internal and external to the instruments. The two level switches were both closed, meaning they were in an alarm state, which signifies a simultaneous high and low level condition. The incontainment cable H291I also exhibited an impedance mismatch of all the wire pairs. The mismatch, located at the cable midpoint, had a TDR pattern characteristic of a wet cable, as seen in Figure 6. The insulation resistance of the circuits was considerably low ($\sim 1.3 \times 10^6$ ohms), even with the application of a low measurement excitation voltage of ~ 1.6 volts.

The motor lube oil instruments of the other reactor coolant pump motors were then tested to examine the similarities of their electrical systems with those of RC-P-1A and to verify the pattern of failure of other electrical components in the reactor coolant pump area. (All four were tested after gross decontamination.) The tests revealed an anomaly that was not observed previously: a high stray dc voltage was observed on all four sets of instruments, with the RC-P-1B instruments being least affected.

The stray dc voltage, referenced to ground, ranged from a low of about 1 volt to a high of 114.5 volts. This stray voltage rendered ineffective the insulation resistance measurements. Transversely, the stray voltage was significantly lower, permitting the acquisition of some meaningful LCR and TDR data.

An investigation into the cause of the stray voltage revealed the computer as the source. A crosstalk existed between the circuits in the inner termination box of R607. The crosstalk impedance was about

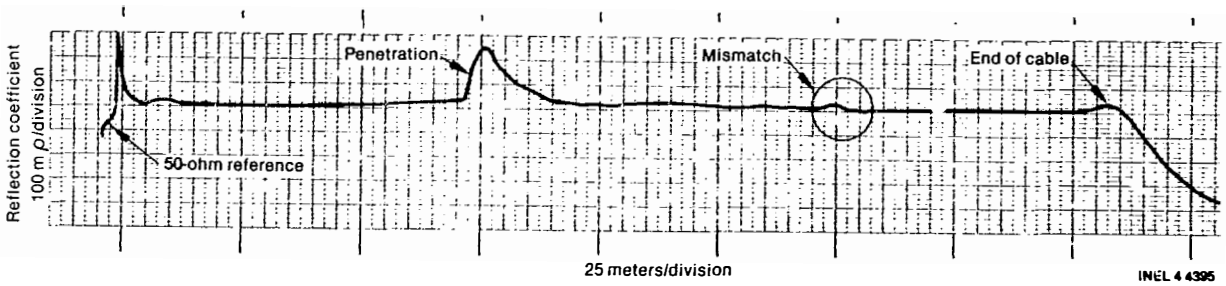

Figure 6. Predecontamination TDR signature of the circuit of oil level switch RC60-LS2.

100,000 ohms. The crosstalk can likely be attributed to contamination tracking or low voltage surface breakdown influenced by the presence of water or conductive contaminants inside the inner penetration box.

The damage probably occurred during the accident, when water in the basement rose up to about the 291-ft elevation; the center of penetration R607 is at the 292-ft elevation. The water remained at the 291-ft level until its removal in 1982. Until then, the bottom of the termination box, whose cables come out at the top and bottom, was probably submerged. The high humidity and water in the termination box could have slowly created a resistive path, such as contamination tracking, across every cable connected on the bottom of the box. This phenomenon, which was not apparent during the predecontamination test, may have been accentuated later by the intrusion into the penetration box of water used in the cleanup operation.

In addition to the circuit crosstalk in the penetration, an impedance mismatch was observed just past the midpoint of the incontainment cable of the RC-P-2A instrument H303I (see Figure 7). The pattern was identical to that of RC-P-1A instrument cable H291I, which again was evident in the retest (see Figure 8). The pattern is characteristic of a wet cable.

The internal circuits of all of the instruments appeared to be normal. The LCR data are consistent with the cable length and with data for good, clean switch contacts. RC60-LS2, the low oil level switch of RC-P-1A, which exhibited a closed contact during the predecontamination test, switched to open. This adjustment cleared the conflicting indication of the oil level status. The system is now in a high level alarm.

Pressure Switches NM-PS-1454, NM-PS-4174, and NM-PS-4175

Pressure switches NM-PS-1454, NM-PS-4174, and NM-PS-4175 are used in the Reactor Building Nitrogen Manifold System. They serve to annunciate in the control room via the Radwaste Panel when the inerting nitrogen header pressure drops below or rises above predetermined values. NM-PS-1454 monitors the supply header pressure; NM-PS-4174 and NM-PS-4175 monitor the

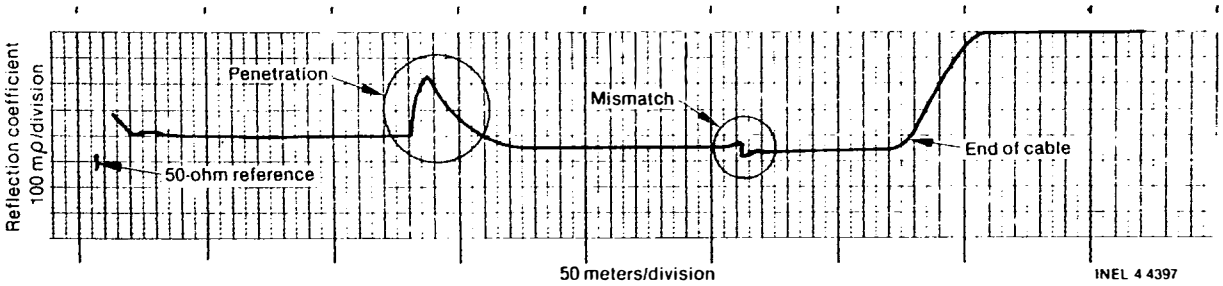

Figure 7. Postdecontamination TDR signature of the circuit of flow switch RC58-FS3.

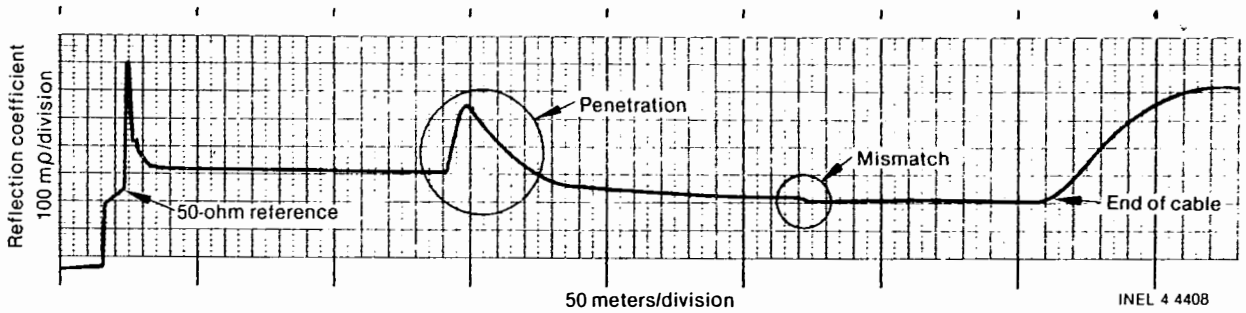

Figure 8. Postdecontamination TDR signature of the circuit of flow switch RC58-FS1.

20-lb header pressure. The pressure switches are forced balance, piston-actuated assemblies made by SOR. Each unit has dual SPDT miniature switching elements, and its housing is watertight.

NM-PS-4174 and NM-PS-4175 are electrically connected in series; an NO contact of NM-PS-4174 is series-connected to an NC contact of NM-PS-4175. NM-PS-1454 uses an NC contact. Pressure switch NM-PS-4174 was set to open at 1.5 psig decreasing; NM-PS-4175 and NM-PS-1454 were set to open at 150 psig increasing; the two alarm circuits are in the same cable, and they share the same common positive leg.

Pressure switch NM-PS-1454 was tested only once before gross decontamination. The test indicated the device was electrically normal in all aspects. Details of the test are discussed in Reference 1. The device was removed from the Reactor Building in mid-1981.

Pressure switches NM-PS-4174 and NM-PS-4175 were statically tested before and after gross decontamination. The results indicate that both pressure switches are closed. Since the tests were performed with the system depressurized, NM-PS-4174 obviously did not reset--it should have opened. Except for this abnormality, the circuit appeared to be normal; the inductance of 134.5 μH and resistance of 2.13 ohms were within the ranges expected for the size, length, and lay of the cables used. The TDR pattern and insulation resistance also indicated no apparent degradation of the cable dielectric.

Since the devices could not be operationally checked, and only one set of contacts for one switching element per device could be tested, their overall condition could not be assessed. Nonetheless, the failure of NM-PS-4174 could be related to the accident. Likely due to the high humidity and water spraying during and after the accident, matter could have settled on the pressure switch stem. Because of the low pressure range of the device, a slight increase of friction between the setpoint adjusting nut and the actuation stem could significantly affect the deadband. This is especially true in the lower end of the range.

NM-PS-4174 was removed from the Reactor Building and examined. Mishandling, however, resulted in the loss of important data, but examinations verified that the deadband increased. Details of the examination are discussed in GEND-INF-041, Evaluation of TMI-2 Pressure Switches NM-PS-1454 and NM-PS-4174.[2]

Vibration Switches RC67-VS1, RC67-VS2, RC67-VS3, and RC67-VS4

Vibration switches RC67-VS1 through RC67-VS4, Robertshaw Model 366, are mounted on the side of each reactor coolant pump motor. Each vibration switch has an NO contact, which latches closed when subjected to vibratory shock motion, and a 115 Vdc reset coil, which unlatches the contact when energized. The device reset coil is rated at 14 watts; its actuation is initiated from the control room. The vibration switches provide signals for the control room alarm and input to the data logger.

Before gross decontamination, RC67-VS1, RC67-VS3, and RC67-VS4 were in situ tested. RC67-VS3 and RC67-VS4 exhibited normal electrical and operational characteristics. In contrast, RC67-VS1 was found in a trip state, and the reset circuit apparently was broken at the device. The three switches had good insulation resistances. All three switches were again tested, along with RC67-VS2, after gross decontamination.

The postdecontamination test, comprising static and dynamic testing, verified the original findings on RC67-VS1, RC67-VS3, and RC67-VS4. RC67-VS3 and RC67-VS4 were normal in all aspects; they had satisfactory insulation resistances and their reset coil resistances of 1042 and 1016 ohms, respectively, as well as their holding current of about 120 ma, remained consistent with the designed rating of 14 watts. RC67-VS1 still exhibited a break in its reset coil circuit, and its switch contact remained latch closed. But its insulation resistance, like that of the other switches, remained satisfactory.

Although RC67-VS2 was found in its normal state, a very high resistance was measured in its reset coil circuit. Its insulation resistance, however, was satisfactory. Like RC67-VS1, the point of failure

of RC67-VS2 is in the device proper. Although the failure is not as catastrophic, the magnitude of the resistance increase is sufficiently high to make the device reset circuit inoperative.

The failed units, RC67-VS1 and RC67-VS2, both located in D-ring A, are suspected to have experienced more severe environmental extremes--higher temperatures and more steam--than those in D-ring B. These conditions could have resulted in the accumulation of water in the devices and the eventual corrosion of instrument terminals and wires. The failure, although accident related, is directly due to long-term rather than immediate effects of the accident.

Solenoid Valves

Four solenoid valves, AH-EP-5037, AH-EP-5040, AH-V6, and AH-V74, were tested. All four valves are Class 1E; however, because these devices were manufactured before the loss-of-coolant accident (LOCA) qualification requirement took effect, they are not LOCA qualified.

AH-V6 and AH-V74

AH-V6 and AH-V74 are nuclear solenoid valves, Models V52600-546 and V57300-52, respectively, manufactured by Valcor Engineering Corporation. AH-V6 is a containment isolation valve of the Reactor Building pressure sensing instrument line. AH-V74 is the pilot valve of the LOCA dampers. These two valves are of different design and size, but their bonnet assemblies and solenoid assemblies are basically identical. The solenoid assemblies differ slightly in the profile of their bases. Each has a 125 Vdc coil with an integral rectifier and transient suppressor and two reed limit switches. Figure 9 is the cutaway section of a typical Valcor solenoid valve. The limit switches of AH-V6 were used for position indication. The limit switches of AH-V74 were not used.

AH-V74 was tested once before Reactor Building gross decontamination. It was then removed from the building for examination before the cleanup operation commenced. During the test, only dynamic measurements were

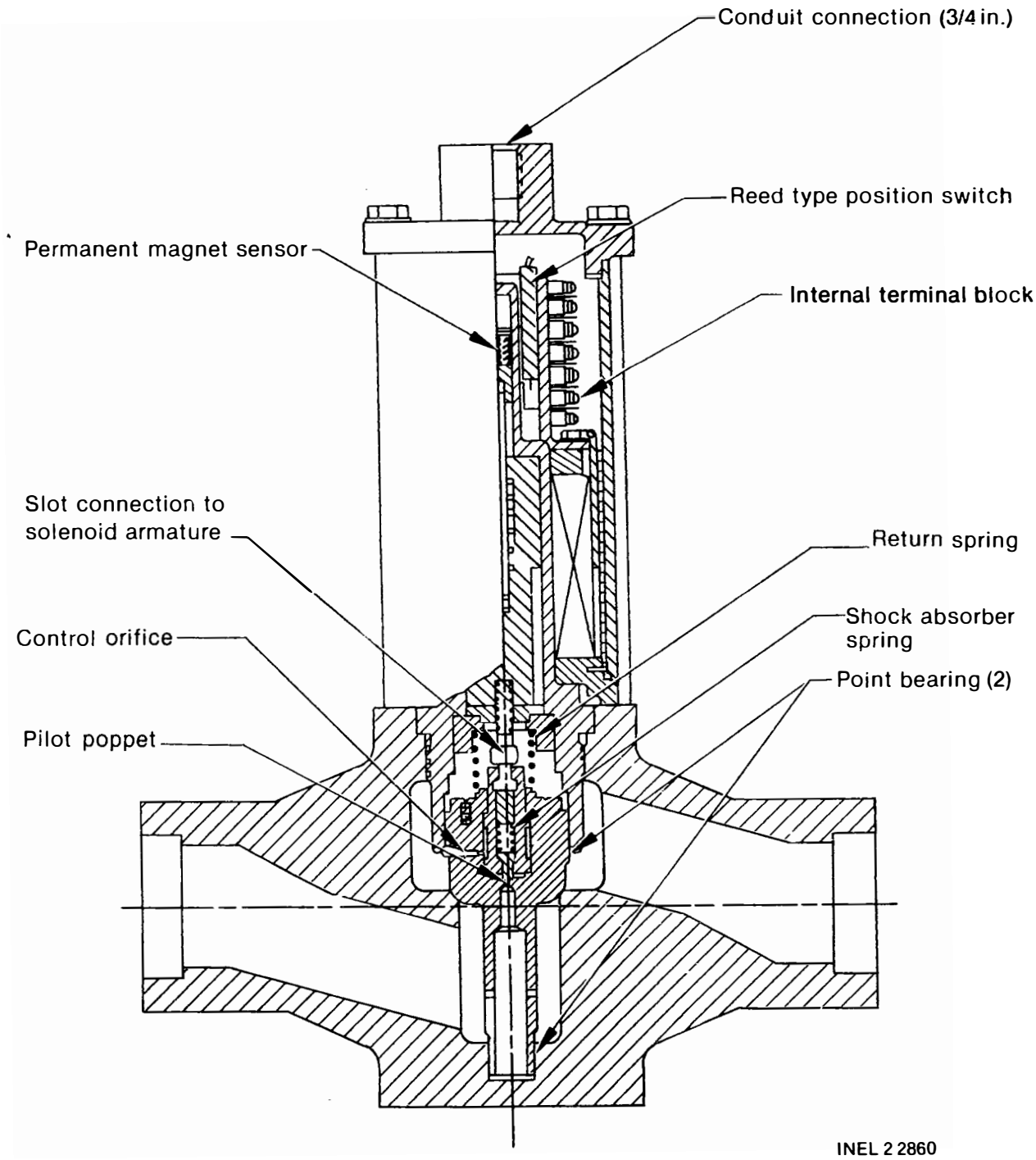

Figure 9. Cross section of a typical Valcor solenoid valve.

taken. As reported in Reference 1, the solenoid operated normally. The observation was later confirmed during its examination, the results and analysis of which were published in GEND-INF-045, Evaluation Results of TMI-2 Solenoids AH-V6 and AH-V74.[3]

AH-V6 was tested twice, before and after gross decontamination. In both cases, static and dynamic tests were performed. As seen in Appendix A, data obtained from the static test was scanty--a consequence of circuit branches in the Reactor Building that were not isolated during the test and the presence of semiconductors in the solenoid circuit. These two factors made the obtained data meaningless or too cumbersome to analyze. Nevertheless, the data obtained from the dynamic test indicated the solenoid was operationally normal. The solenoid drew a current of about 0.5 ampere, a value significantly less than the designed maximum of 1.5 amperes. The solenoid also operated the valve, as indicated by the switching of an associated limit switch.

One abnormality that was observed during the testing of AH-V6 was the failure of the associated OPEN limit switch. This switch was closed when the valve was closed and remained closed when the valve was open. The circuit also exhibited a slightly higher than normal resistance of 3.72 ohms. Since the reed switch was built with an NO contact and designed to close only when influenced by a magnetic field, its failure was suspected to be due to welded contacts. The CLOSE limit switch, on the other hand, operated normally. It exhibited indications of a normal contact; the circuit resistance, for example, was within the value corresponding to the resistance of the length of the cable pulled.

AH-V6 was removed from the Reactor Building and examined. The assembly suffered extensive physical degradation, but its operational characteristics remained normal. The failed limit switch incurred moisture intrusion, a circumstance which evidently was the cause of the failure (see Reference 3).

AH-EP-5037 and AH-EP-5040

AH-EP-5037 and AH-EP-5040 are Automatic Switch Company (ASCO) solenoid valves Model HT8331A45. They are the pilot valves of Reactor Building purge valves AH-V2B and AH-V3A, respectively. The solenoids have 120 Vac coils with Class H insulation.

Each valve is associated with two limit switches, which likewise are Class 1E. AH-KS-5037 is the designation for the limit switches of AH-V2B, and AH-KS-5040 for the limit switches of AH-V3A. The limit switches are the snaplock type, NAMCO Model EA-740-20000. They are used for position indication: the CLOSE limit switch actuates when the purge valve is closed, and the OPEN limit switch actuates when the purge valve is open.

The solenoid valves and limit switches were statically and dynamically tested before and after Reactor Building decontamination. In both tests, the electrical characteristics of the solenoid valves were found to be normal in all aspects: the insulation resistance was in the megohm range, the circuit showed no parasitic contamination, and the holding current was 0.20 ampere, less than the rated value of 0.225 ampere. The lower-than-rated holding current indicated that the solenoid valve plungers were fully actuated. The AH-KS-5037 limit switches also exhibited normal electrical and operational characteristics: the insulation resistance was in the megohm range and the capacitance, inductance, and resistance data were consistent with a normal circuit condition.

The AH-KS-5040 limit switches exhibited normal electrical characteristics, but one unit operated erratically; the OPEN unit actuated intermittently when AH-V3A was operated. The CLOSE switch, meanwhile, operated properly. The intermittent operation of the OPEN limit switch may be due to two possible causes. One possibility is the limit switch setting could have been at the threshold of actuation when the valve was fully open. The other possibility is the solenoid valve (AH-EP-5040) or the air line to the valve actuator leaked, and as a consequence there was not enough air pressure to fully stroke the valve. ASCO solenoid valve Model HT8331A45 was reported earlier to contain acetal plastic and Buna-N, materials known to have a relatively low damage threshold to radiation and

high temperatures. Degradation of these materials could cause the solenoid valve to leak internally and make it only partially functional or even totally inoperative.

Power-operated Relief Valve RC-R2

Power-operated relief valve (PORV) RC-R2 is a solenoid operated pressure control device used as part of the reactor coolant pressure control system (see Figure 10). It opens when the reactor pressure exceeds 2255 psig and closes when the pressure drops below 2205 psig. Before the accident, the valve opened automatically to release the excess reactor pressure. When the reactor pressure dropped below the setting, the solenoid operator deenergized but the valve remained open. The valve's failure to close went unnoticed for an extended period of time, during which reactor coolant water escaped through the PORV, eventually uncovering the core and leading to core damage.

The PORV is a 2-1/2-in. consolidated 31533VX-30 Electromatic relief valve made by Dresser Industries. It has three main components, namely, the main valve, the pilot valve, and the solenoid operator (see Figure 11). The main valve is actuated by the process steam pressure. The pilot valve controls the steam pressure acting on the main valve. The solenoid operates the pilot valve; it opens the pilot valve when it is energized. The pilot valve spring-returns closed when the solenoid is deenergized.

The solenoid operator has two coils, designated as lower and upper coils, designed for 125 Vdc operation. The coils are mounted one on top of the other and connected in series as shown in Figure 12. The bottom coil, which is designated as the upper coil, is also connected in parallel to a normally closed plunger-actuated cutout switch. The solenoid initially operates with the lower coil energized. As soon as the solenoid plunger is fully extended, the cutout switch is opened, thus energizing both coils.

The PORV also has two limit switches for position information. These two switches, one normally closed (LS3) and the other normally open (LS7), are actuated by the solenoid plunger; hence, they do not represent the true position of the main valve.

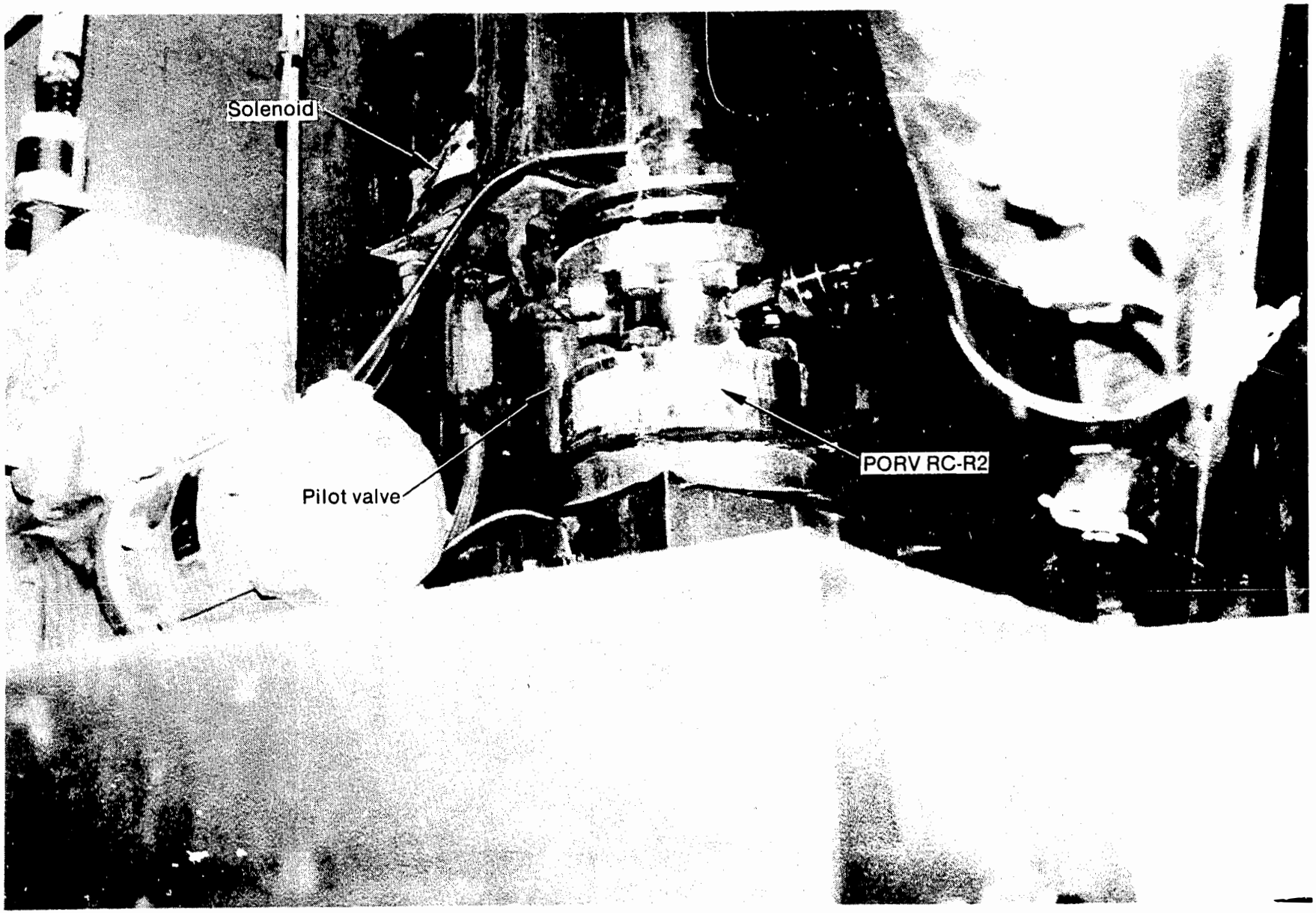

Figure 10. TMI-2 pressurized power-operated relief valve (PORV) in place.

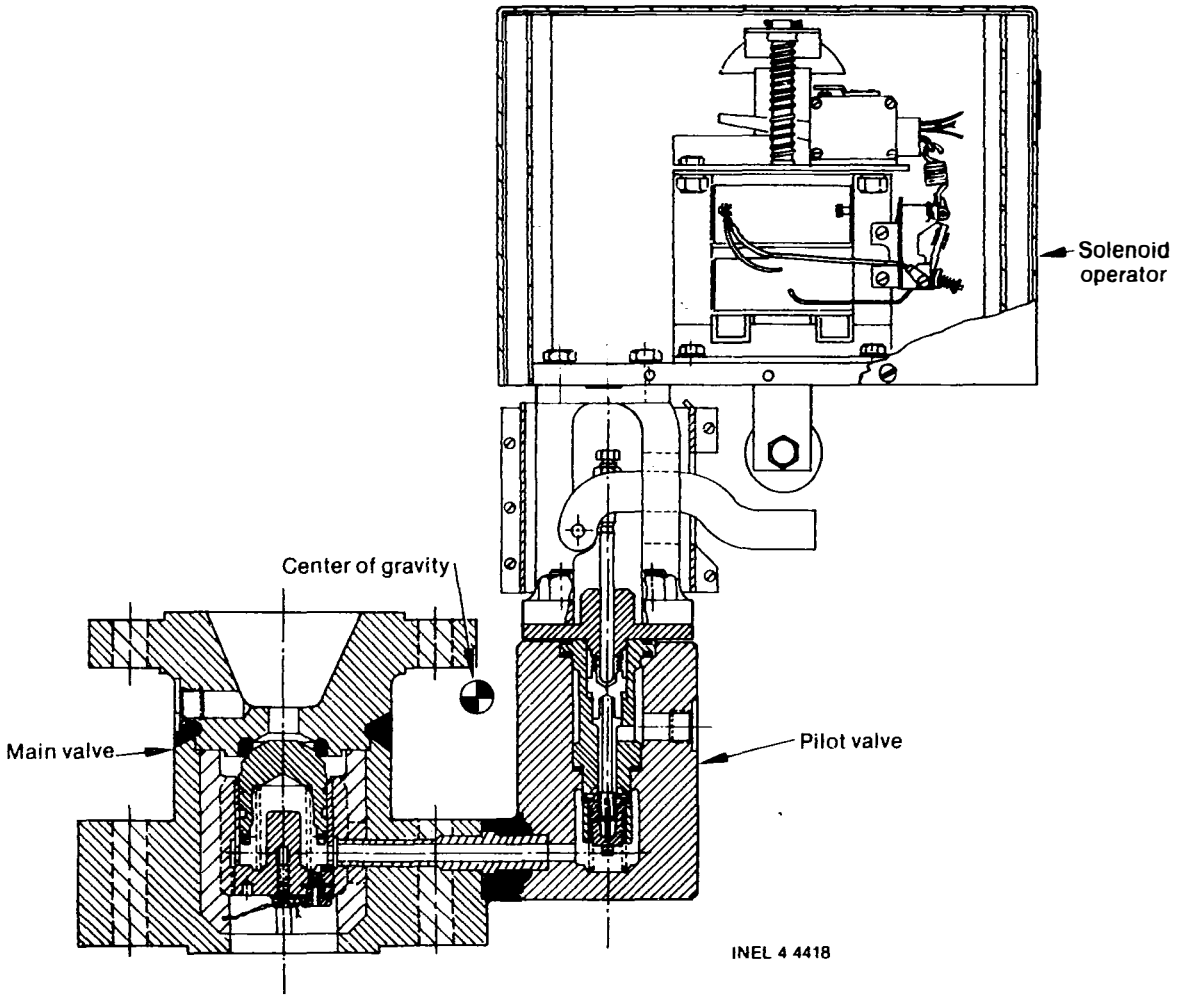

Figure 11. Cross section of the PORV assembly.

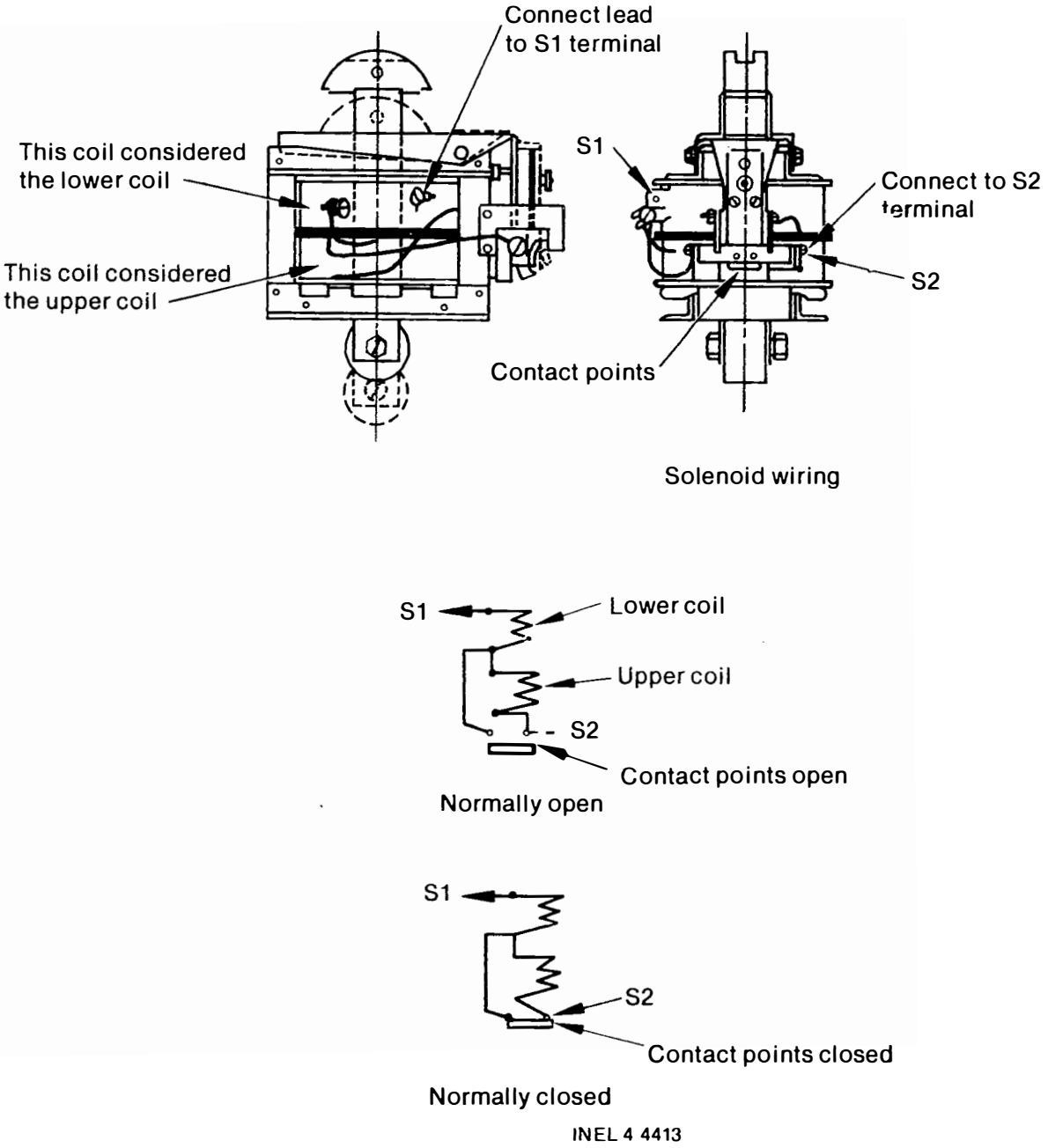

Figure 12. Circuit arrangement of the solenoid of RC-R2. One coil functions to open the valve, and both coils function to hold the valve in open position. When the lower coil is energized, current flows through the contact points following the path of least resistance, bypassing the upper coil. In full open position, contact points are broken, and current must flow through both coils. (This is a dc solenoid for a 31533VX-30 valve.)

The test of the PORV solenoid and limit switches indicates the unit is intact. The electrical parameters are normal, and the insulation resistances are high. However, the inductance and resistance measured on the solenoid correspond to the two coils in series. The solenoid has a design inrush current of 26.3 amperes and holding current of 0.4 ampere. Since the coils are designed for 125-Vdc operation, the resistance of the solenoid in its deenergized condition should be 5.29 ohms, and in the solenoid's steady state condition, the resistance should be 312.5 ohms. Photographs from early Reactor Building entries show the solenoid plunger to be fully retracted; hence, the measured values for inductance and resistance suggest the cutout switch is open.

The difference between the measured resistance of 301 ohms and the expected value is attributed to temperature. The measured resistance was taken at an ambient temperature of 70 to 80°F, while the designed value is based on a hot coil.

The impact of the open cutout switch on the operation of the solenoid is severe; the parameter affected by the deficiency is the force developed by the electromagnet. The opening operation of the pilot valve is dependent upon the impact developed by the solenoid plunger against the pilot valve lever. The impact force is dependent upon the initial force developed by the solenoid. The force developed by the solenoid is expressed by the relation

$$F = \frac{0.02 \ \pi (NI)^2}{A \ R^2} \qquad (2)$$

where

NI = number of ampere turns

A = plunger cross-sectional area

R = reluctance of the plunger.

This expression demonstrates that the number of ampere turns is the only factor that would vary the force since the area and reluctance are fixed. Hence, in order for the solenoid to develop the designed initial force, the turn ratio,

$$\frac{N_1 + N_2}{N_1} = \frac{I_1}{I_2} \tag{3}$$

where

N_1 = number of turns of the lower coil

N_2 = number of turns of the upper coil

I_2 = designed inrush current of 23.6 amperes

I_2 = $\frac{\text{rated voltage}}{\text{measured solenoid resistance}}$ or $\frac{125}{301} = 0.415$ ampere,

must be at least 58.87. According to General Electric Company, manufacturer of the solenoid, the solenoid will not pick up if both coils are energized simultaneously. This circumstance was confirmed during startup testing of the equipment.

The two limit switches appeared to be intact although there was what appeared to be a subtle abnormality on LS-7. Switch LS-7 exhibited an apparent capacitive dip on its TDR signature at the device end of the cable. This dip characterizes the presence of water. The contamination is so slight, however, that its effect on the circuit function is negligible. Switch LS-3 was electrically normal in all aspects. The insulation resistance of both limit switches was normal.

The failure of the valve solenoid cutout switch prompted an evaluation of the device control and indication scheme. Under the present scheme, as shown in Figure 13, the only indicating light available to the control room operator is the "OPEN COMMAND." This indicating light signifies that a

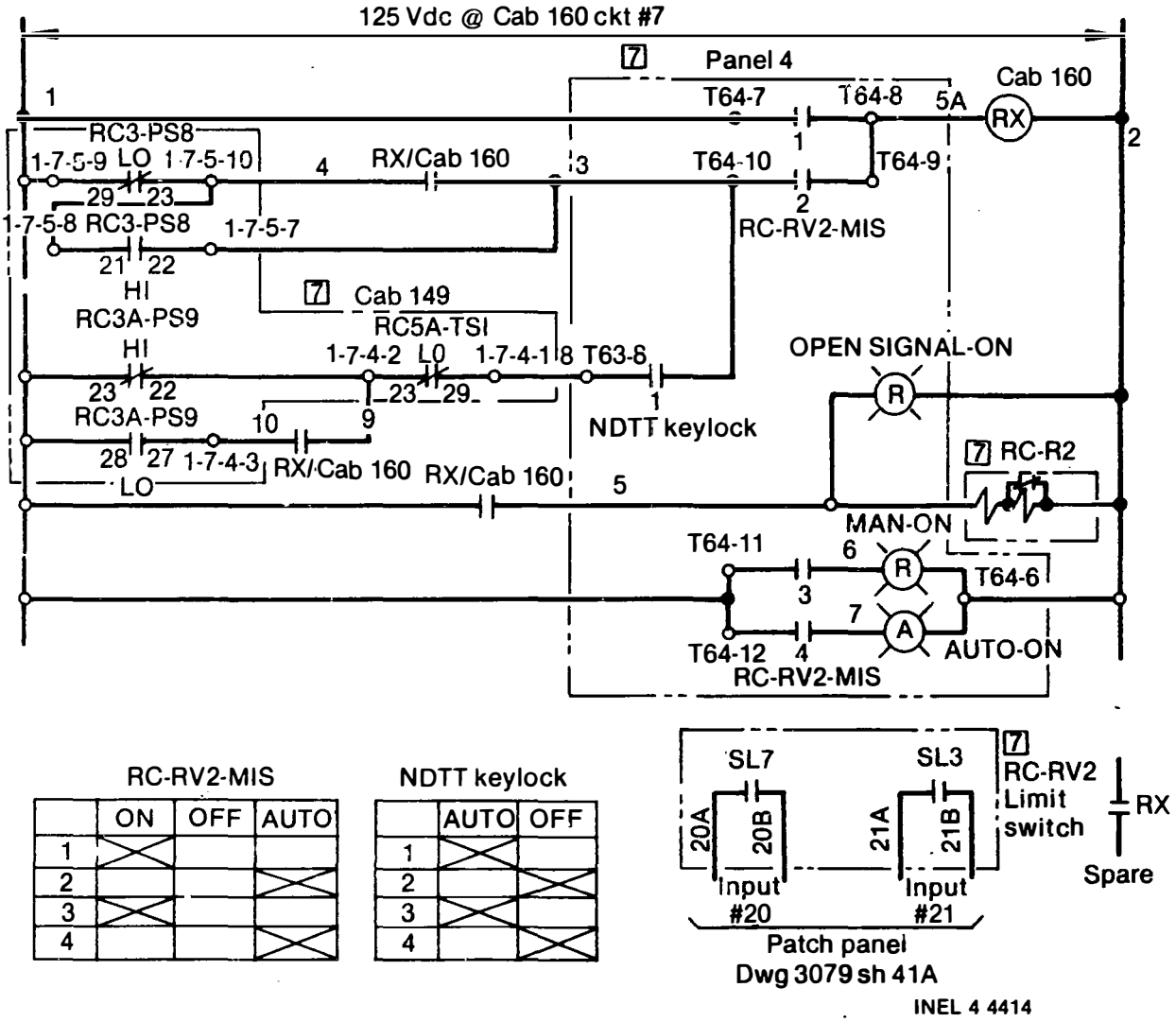

Figure 13. Control wiring diagram of RC-R2.

command to open the valve has been initiated and the solenoid is energized. With the kind of fault noted during the in situ test, the lighting of the indicating light will have no significance because the solenoid will not pick up, even though it is energized. With the absence of any position indication, the control room operator will not know if the pilot valve actuated.

Reactor Coolant Pump Motors

The reactor coolant pump motors are 9000 hp, 6900 Vac, 3 phase induction units. They drive the pumps that circulate primary water through the reactor. During the TMI-2 accident, these motors were operated under conditions in which they were not designed to operate: they were operated to cool the reactor by force convection and to force out the hydrogen bubble that rose to the reactor vessel dome. Removal of the bubble was imperative to effect natural convection cooling of the reactor core. Each motor is powered by two parallel-connected cables, each cable having three 750 MCM conductors.

Each reactor coolant pump motor is provided with a set of Y-connected current transformers (CT), which form part of the motor differential current protection circuit, and two sets each of CTs and potential transformers (PT), used for power monitoring. The transformers are connected with AWG 9, soft-drawn copper conductor cabling. Figure 14 is an interconnection wiring diagram for a typical reactor coolant pump motor.

Reactor coolant pump motors RC-P-1A and RC-P-2B were tested before Reactor Building gross decontamination. In the test, abnormalities were observed and reported on both motors and their respective instrument transformers. Both motors' stator windings and instrument transformer windings exhibited an uncharacteristically high dc resistance. In addition, the winding circuit of RC-P-1A motor phase A differential CT exhibited a break in the inner termination box of penetration R405. The elevated resistance data on the motor and instrument transformer windings were fourd in a later test to be in error. The break on the RC-P-1A motor differential CT was confirmed, however.

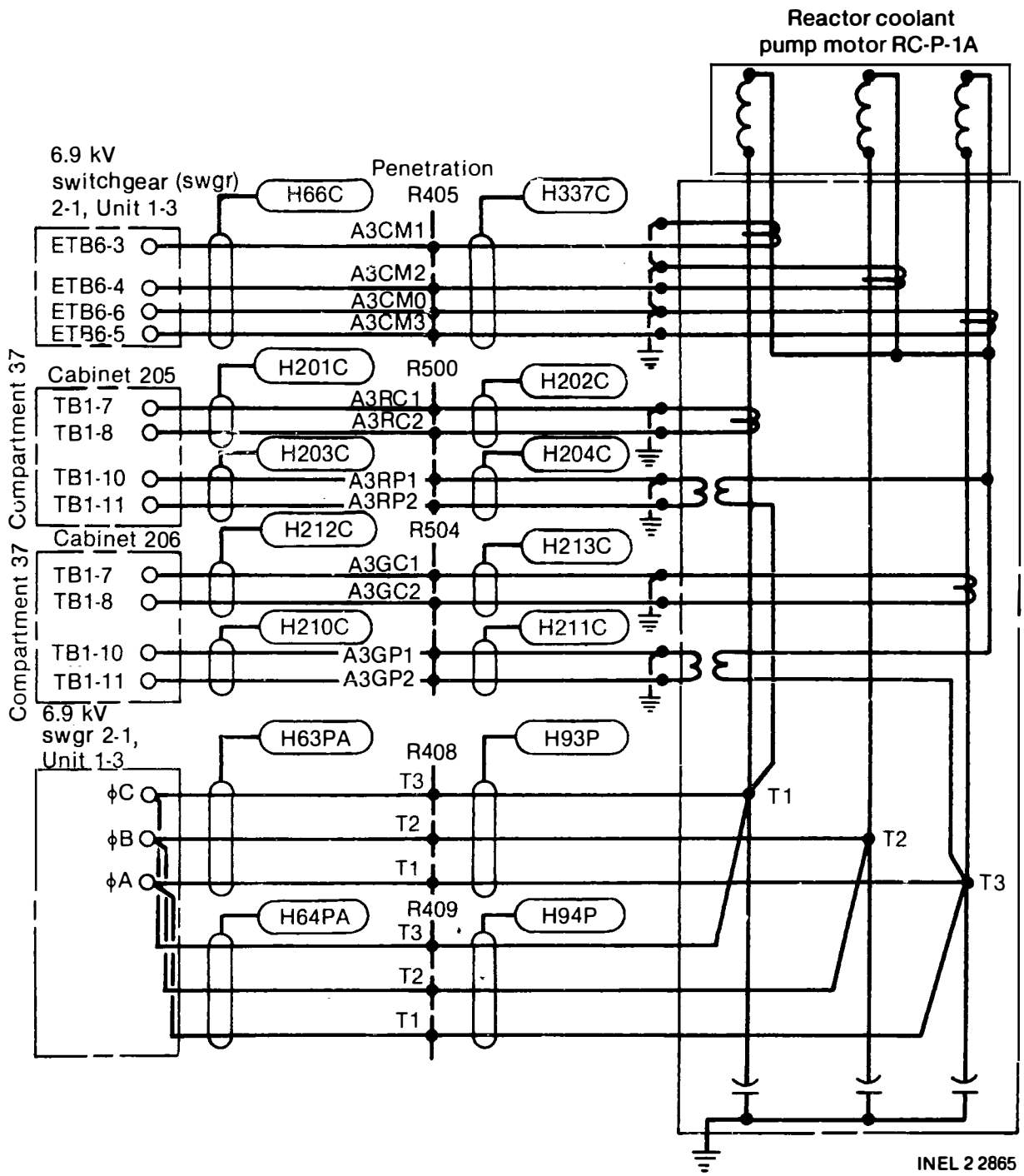

Figure 14. Interconnection wiring diagram of the RC-P-1A motor.

Pump motor RC-P-2A was tested with RC-P-1A and RC-P-2B after gross decontamination. The test was carried out in the same manner as the initial test, in which circuit resistance, effective capacitance or inductance, TDR, and insulation resistance were measured. The test results indicate the units are electrically normal. Their inductances, which were measured at 120 Hz and 1 kHz, are consistent at about 6.5 and 5.0 mH, respectively. Likewise, the dc resistance across each motor's T-leads is consistent with the others and commensurate to that expected for the size of each unit. One deficiency that was observed, however, was the marginal insulation resistance. On all three motors, the insulation resistances are lower than the standard recommended minimum value for operation of 8 megohms. Their polarization indices of almost unity indicate that the motor windings might also be damp.

The differential CTs of RC-P-2B appear to be intact; their circuit resistance, inductance, and TDR signatures are consistent with those of a normal circuit. There is, however, some observable change in the characteristic impedance of the CTs' cable; the cable impedance decreased slightly. This pattern is attributable to the presence of moisture and in this case is likely due to the high humidity that existed in the Reactor Building for an extended period of time. Since the cable is used in a power circuit, the decreased cable characteristic impedance does not affect the function.

In contrast with the condition of the RC-P-2B differential CTs, those of RC-P-1A and RC-P-2A exhibited more severe abnormalities. The RC-P-1A CTs were broken on circuit A3CM1 (see Figure 14). The break is shown on the TDR traces (Figures 15 through 18) to be in the inner termination box of penetration R405. In addition, the test showed a slightly elevated resistance in circuit A3CM0, the high resistance point likewise being in the inner penetration box. Another anomaly that was observed on the RC-P-1A CT is the absence of the ground wire from the neutral of the transformers. No significant change in the characteristic impedance of the CTs' in-containment cable was observed. In the case of the RC-P-2A differential CTs, a circuit break on phases T2 and T3 CTs also exists. The TDRs show wires B4CM2 and B4CM3 broken in inner penetration box R405 (see Figures 19, 20, and 21).

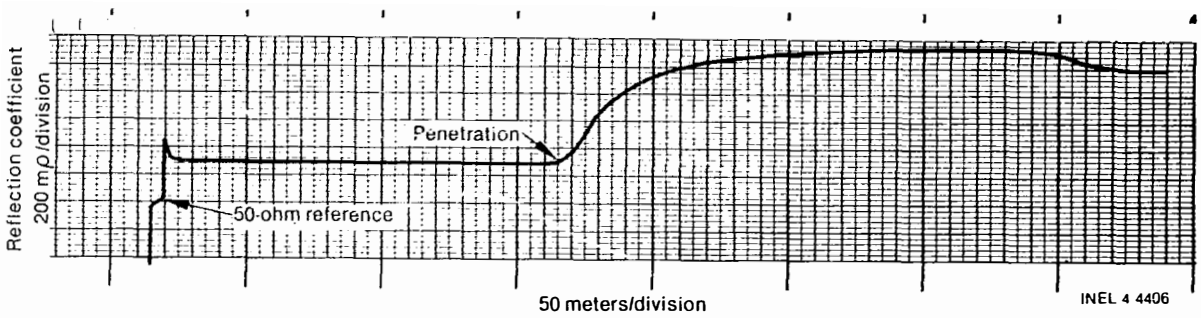

Figure 15. Postdecontamination TDR signature of wires A3CM0(+) and A3CM1(-) of reactor coolant pump motor RC-P-1A.

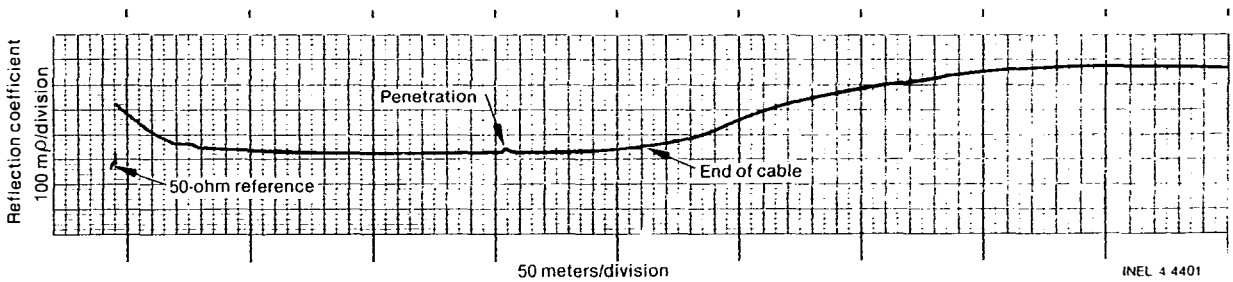

Figure 16. Postdecontamination TDR signature of wires A3CM0(+) and A3CM2(-) of reactor coolant pump motor RC-P-1A (differential CT).

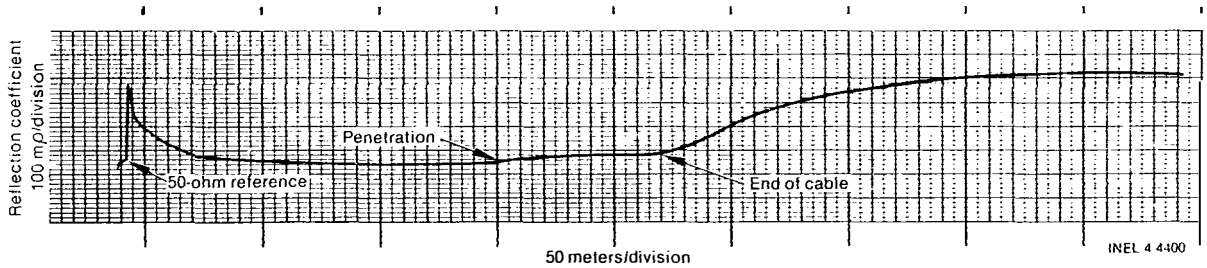

Figure 17. Postdecontamination TDR signature of wires A3CMO(+) and A3CM3(-) of reactor coolant pump motor RC-P-1A (differential CT).

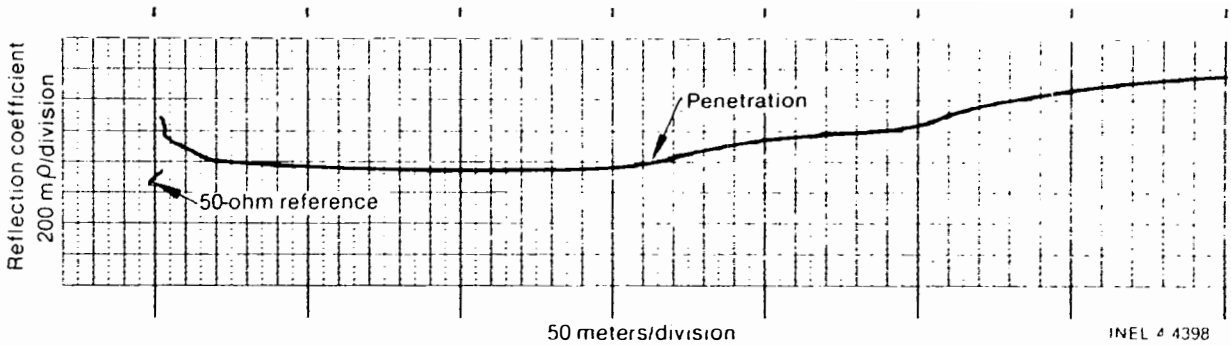

Figure 18. Postdecontamination TDR signature of wires A3CM2(+) and A3CM1(-) of reactor coolant pump motor RC-P-1A (differential CT).

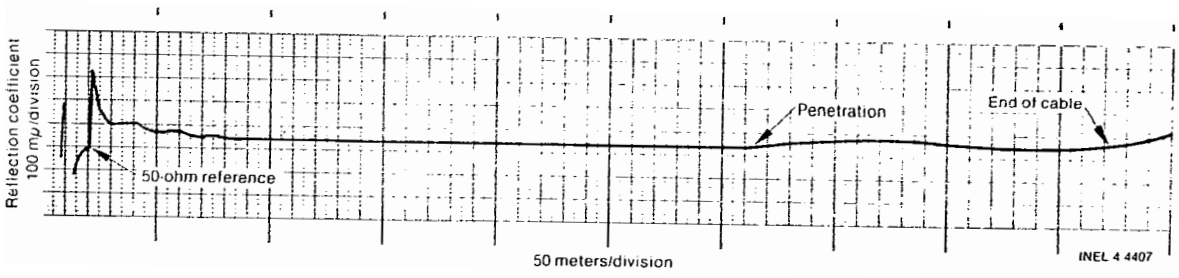

Figure 19. Postdecontamination TDR signature of wires B4CM0(+) and B4CM1(-) of reactor coolant pump motor RC-P-2A.

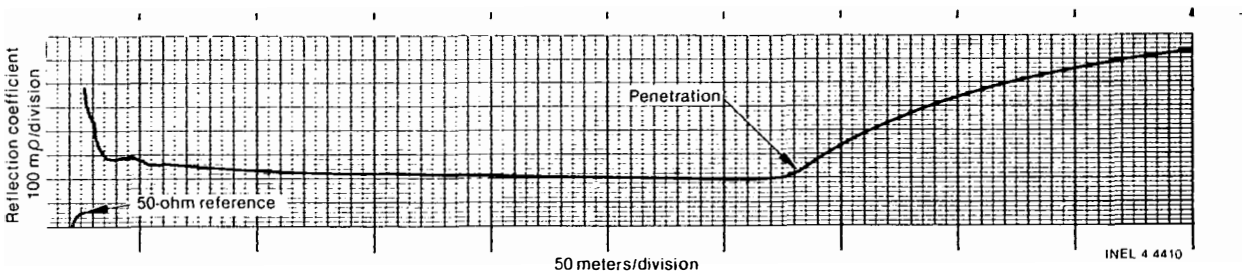

Figure 20. Postdecontamination TDR signature of wires B4CM0(+) and B4CM2(-) of reactor coolant pump motor RC-P-2A.

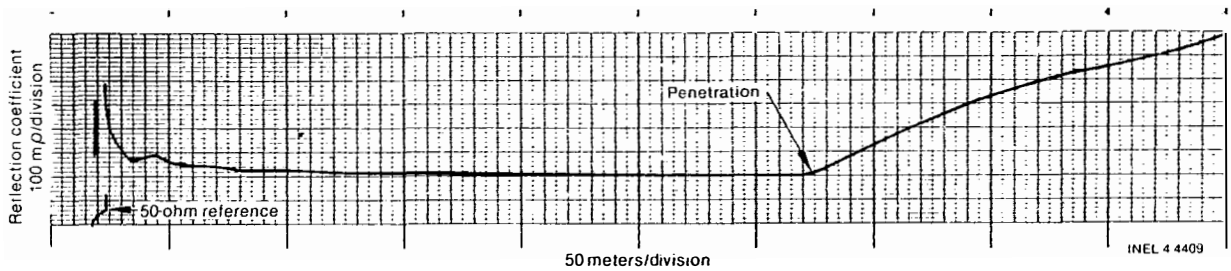

Figure 21. Postdecontamination TDR signature of wires B4CM0(+) and B4CM3(-) of reactor coolant pump motor RC-P-2A.

The power-monitoring CTs and PTs of the three motors appeared to be intact. They had a consistent circuit resistance.

Overall, all three motors are electrically intact, but because of their high voltage rating, their degraded insulation system may compromise their operability.

Failure of the differential CT circuits of RC-P-1A and RC-P-2A motors are likely the result of extensive steam in the area during the accident. Inner penetration box R405 is located in the immediate area where the steam from the reactor coolant drain tank (RCDT) was exhausting. The steam intruded the penetration box and corroded the terminals within. Similar evidence was observed in other circuits in other penetration boxes in the area of the exhausted steam.

Backstop Lube Oil Pump Motors of the Reactor Coolant Pump Motors

A backstop lube oil pump of a reactor coolant pump motor provides lubricating oil to the backstop and guide bearings of the associated reactor coolant pump motor. Two pumps are provided on each reactor coolant pump motor. They are operated before the reactor coolant pump motor is started, during its acceleration to speed, and during its coastdown. They stop when the reactor coolant pump motor is running.

Each oil pump is driven by a 0.5 hp, 480 Vac, 3 phase induction motor. The motors are non-Class 1E components but their operation during the accident recovery to support the reactor coolant pump operation may be considered crucial.

Five motors, two each on RC-P-1A and RC-P-2A and one on RC-P-1B, were tested. Units RCP-2-1A-1 and RCP-2-1B-1 were tested before gross decontamination. These two motors appeared normal in all aspects except for a relatively low polarization index, which was likely due to dirt on the windings rather than water since the insulation resistance was found to be in the high megohms.

After gross decontamination, the five backstop lube oil pump motors underwent a static test. The results indicate that all five motors are electrically intact. They have a consistent loop inductance and resistance across all the phases. Their TDR traces also have a pattern that is characteristic of a normal circuit. And their insulation resistances are in the very high megohms range.

Overall, the five motors exhibited only one electrical abnormality: a relatively low insulation polarization index, which is inconsequential for a low voltage system. The abnormal polarization index may just have resulted from dirt contaminating the motor winding surfaces.

Backup Oil Lift Pump Motors of the Reactor Coolant Pump Motors

Each reactor coolant pump motor has a set of two oil lift pumps. These pumps provide lubrication to the motor thrust bearings during startup and coastdown. The two oil lift pumps are individually driven by ac and dc motors. The ac motor driven pump is called the auxiliary oil lift pump. The dc motor driven pump is called the backup oil lift pump, and is a 10-hp, 250-Vdc, shunt field unit. Both pumps operate under the same control scheme. They start before the associated reactor coolant pump motor is started and stop when the motor reaches 1100 rpm. They start again during coastdown and then stop when the reactor coolant pump motor comes to a full stop. Their operation is a permissive for the startup of the reactor coolant pump motor. During the accident, all of the oil lift pumps operated to run the associated reactor coolant pump. The RC-P-1A oil lift pumps may have operated seven times during the period.

All four backup oil lift pump motors were in situ tested statically following gross decontamination. The test revealed severe abnormalities to the RC-P-1A backup oil lift pump motor. The backup oil lift pump motors of RC-P-1B, RC-P-2A, and RC-P-2B appeared to be intact, with minimal degradation.

The backup oil lift pump motor of RC-P-1A exhibited the same phenomenon that was observed in the predecontamination test. Its armature circuit resistance remained very high and the associated TDR (Figure 22)

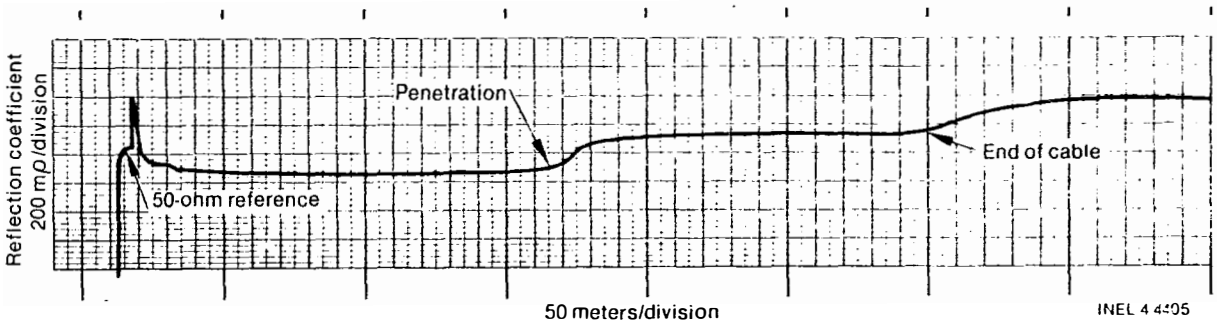

Figure 22. Postdecontamination TDR signature of wires A1(+) and A2(-) of the RC-P-1A backup oil lift pump motor.

still showed the point of high resistance to be at the equipment. The field circuit also had a high loop resistance, and the location of the fault is seen on the TDR (Figure 23) to be in inner penetration box R400. The test also revealed the absence of the jumper on the A1 and A2 circuits (Figure 24) in the inner box of penetration R400.

Corrosion product buildup on the motor commutator-brush interface is likely the cause of the high armature circuit resistance. The corrosion is presumably the product of the building spray and the high humidity that existed in the Reactor Building for an extended period of time. Corrosion on the wire terminals was likewise considered the cause of the break in the field circuit. This postulate is based on the presumption that the penetration box, located near the RCDT, was in the path of the steam as it rose through the open stairwell.

Based on obtained data, the motor failure can be classified as catastrophic, and theoretically the equipment will not operate. This inference, however, does not take into account the fact that the measurement was made with instruments putting out low-voltage excitation signals. Since the high resistance path could be merely a film of oxides, the application of full rated voltage could possibly break down the insulating interface, enabling the motor to operate.

Tests of the backup oil lift pump motors of RC-P-2A, RC-P-1B, and RC-P-2B indicate that they are intact. Their measured field circuit resistances of approximately 235 ohms are consistent with expected values. For a dc motor, the field circuit power is about 3% of the motor total horsepower. For a 250-volt, 10-horsepower motor, the expected field winding resistance would be about 280 ohms. The measured armature resistances, although not consistent with each other, agree closely to the 2-ohm value that was taken during the startup test. Variance of the three resistances could be attributed to the degree of cleanliness of the commutator-brush interface. The TDR signatures of the circuits of the RC-P-1B and RC-P-2A backup oil lift pump motors disclosed that the slightly elevated armature circuit resistances appeared to manifest from the equipment.

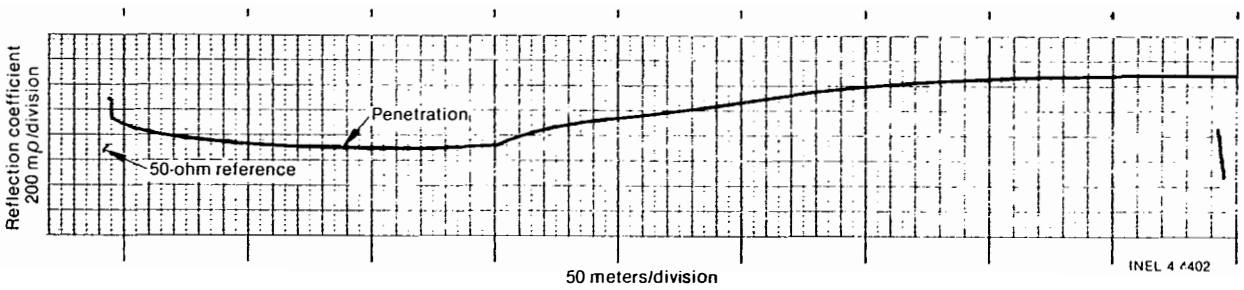

Figure 23. Postdecontamination TDR signature of wires F1(+) and F2(-) of the RC-P-1A backup oil lift pump motor.

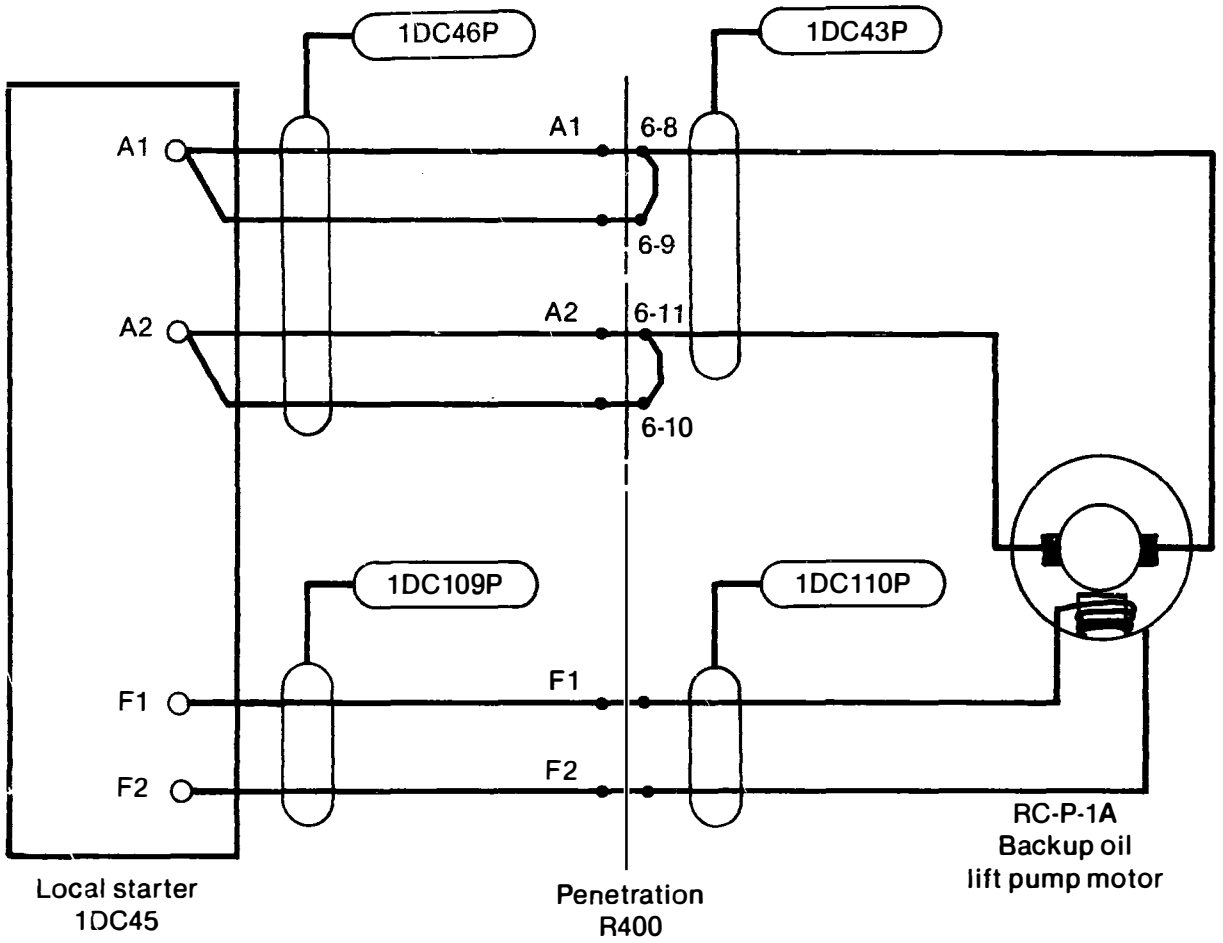

Figure 24. Interconnection wiring diagram of the RC-P-1A backup oil lift pump motor. The armature and field circuit wires are terminated on terminal blocks in both the inner and outer penetration boxes.

The backup oil lift pump motor of RC-P-2B appeared to be normal in all aspects and should operate normally.

The backup oil lift pump motors of RC-P-1B and RC-P-2A should also operate normally. Analyses indicate that sufficient torque will be developed upon application of the voltage to spin the motors. The corrosion product suspected of causing the elevated resistance will most likely come off of the commutator-brush surface with the initial few revolutions of the motors. On the contrary, if the measured resistance is impenetrable, effectively, there will be a decreased applied voltage, hence, a decreased armature current as well as decreased speed. For a given motor, the torque is proportional to the armature current and to the strength of the magnetic field. Since the magnetic field strength will be the same by virtue of the unaffected field winding circuit, the decreased armature current will proportionately reduce the torque.

Reactor Building Air Cooling Fan Motors

Reactor Building air cooling fans AH-E-11A through AH-E-11E circulate Reactor Building air so that heat originating from hot pipes, operating equipment, and the reactor vessel can be removed. During normal plant operation, only two of the units are required to operate. During a LOCA, all five units operate, discharging some of the air into the upper levels of the Reactor Building to condense the steam released in the accident.

In the accident at TMI-2, all five of the units were operated, and units AH-E-11A, B, C, and E have been operating continuously since then. AH-E-11D operations were halted in August 1979 because of a thermal overload in the drive motor high speed winding.

The motors that drive the fans are 100 hp, 460 Vac, 3 phase, design Class B induction machines. They have two sets of independent windings. one for slow speed and one for fast speed operation. The fast speed windings are identified as T11, T12, and T13; the slow speed windings are identified as T1, T2, and T3. The motor design data are presented in Table 1.

TABLE 1. DESIGN DATA OF THE REACTOR BUILDING AIR COOLING FAN MOTORS

Nomenclature	Speed	
	Fast	Slow
Revolutions per minute	1193	892
Full load amperes	130	132
Efficiency (%)	94	92.5
Power factor (%)	76	77.5
KVA/hp code letter	K	G

The motors are classified as Class 1E and are LOCA qualified. They are powered by three-conductor feeder cables. The out-of-containment cables have 4/0 conductors and the in-containment cables have 2/0 conductors.

The Reactor Building air cooling fan motors normally operate at fast speed. Under normal operating conditions, the running current is predicted to be 84 amperes. The slow speed operation, which corresponds to a pressure test mode, has a predicted running current under normal operating conditions of 69 amperes.

The motors first started running in 1977. Records from startup tests show that all of the motors had a dc resistance of 0.2 ohm across the T-leads of each winding and an insulation resistance of more than 10^8 ohms. Starting and running current data from the above tests are not available. However, periodic measurements taken before and after the accident, as shown in Table 2, provided values of less than the designed full load rating of 130 amperes. The locked rotor currents, based on the designed voltage of 460 Vac, are 1077 amperes for the fast speed circuit and 770 amperes for the slow speed circuit.

All of the motors were subjected to static and dynamic tests. In the dynamic test, starting and running currents were measured for the speed at which the individual motor was allowed to start and operate. Only one start was permitted on each motor--fast speed for AH-E-11B, C, and E and slow speed for AH-E-11A and D. In a later test, AH-E-11D was started at fast speed. The currents were taken with a line voltage of 495 volts and are summarized in Table 3.

TABLE 2. RUNNING CURRENT HISTORY OF AIR COOLING FAN MOTORS

Fan Identification Number	Speed	Running Current (Amps)								
		3/27/79 Test			12/15/81 Test			1/27/83 Test		
		ØA	ØB	ØC	ØA	ØB	ØC	ØA	ØB	ØC
AH-E-11A	SLOW	68.9	69.9	68.9	--	--	--	--	--	--
	FAST	82.3	82.9	79.9	90.9	93.0	90.1	91.8	93.6	90.3
AH-E-11B	SLOW	69.0	69.6	67.3	--	--	--	--	--	--
	FAST	81.9	82.2	79.5	86.1	90.5	88.5	90.2	90.6	89.2
AH-E-11C (USS-2-11E)	SLOW	64.3	65.8	65.3	--	--	--	--	--	--
	FAST	79.7	82.6	81.2	--	--	--	--	--	--
AH-E-11C (USS-2-21E)	SLOW	64.3	67.8	66.7	--	--	--	--	--	--
	FAST	77.9	81.5	80.8	85.6	87.6	84.6	86.3	89.1	87.2
AH-E-11D	SLOW	67.7	68.3	66.1	--	--	--	--	--	--
	FAST	81.3	80.7	78.5	--[a]	--[a]	--[a]	--[a]	--[a]	--[a]
AH-E-11E	SLOW	68.3	68.2	66.3	--	--	--	--	--	--
	FAST	81.3	78.7	78.6	85.9	88.2	86.5	89.3	90.4	87.2

a. Tripped on 8/7/79.

TABLE 3. STARTING AND RUNNING CURRENT DATA OF THE REACTOR BUILDING AIR COOLING FAN MOTORS

Identification Number		Starting Current (Amps)			Running Current (Amps)			Remarks
		ØA	ØB	ØC	ØA	ØB	ØC	
AH-E-11A	FAST	--	--	--	88.0[a]	94.0[a]	90.0[a]	Motor was initially running on fast speed. It was restarted on slow speed.
	SLOW	--	--	802	76.2	79.0	76.3	
AH-E-11B	FAST	--	--	954	87.0[a]	89.0[a]	88.0[a]	Motor was initially running on fast speed. It was restarted on fast speed.
	SLOW	--	--	--	87.3	91.2	89.1	
AH-E-11C	FAST	--	--	902	85.5	87.9	85.8	Motor was initially running on fast speed. It was shut down before data could be obtained. It was restarted on fast speed.
	SLOW	-	--	--	--	--	--	
AH-E-11D	FAST	--	--	--	--	--	--	Motor has been off since 8/79. Started on slow speed.
	SLOW	--	778	--	75.5	76.6	75.5	
AH-E-11E	FAST	830	--	--	88.5[a]	89.9[a]	88.3[a]	Motor was initially running on fast speed. It was restarted on fast speed.
	SLOW	--	--	--	88.5	90.3	88.6	

a. Number corresponds to the current drawn by the motors before they were shut down for the test.

An accurate static test measurement was spoiled by the presence of a low frequency (20 to 27 Hz) electrical noise. The noise, ranging from a few millivolts to 1.3 volts, was so dominant that only the insulation resistance measurement could be taken with accuracy. Real resistance, equivalent series resistance, and inductance data were erratic and varied over a wide range, thereby making them meaningless.

During the testing, at least two fans were always in operation. Therefore, the motor that was being tested probably was windmilling because the associated inlet damper failed to close. The inlet damper is supposed to close to prevent air from blowing out of an operating fan to a nonoperating fan inlet plenum. The motors in effect behaved as generators, thus explaining the measured electrical noise.

Of the five Reactor Building air cooling fan motors tested, AH-E-11B was the only unit that was not affected by electrical noise. The unit exhibited dc resistances in its slow and fast speed windings (0.17 and 0.14 ohm, respectively) that are in close agreement with the startup value of 0.2 ohm. It also had a slow speed inductance of 5.04 mH and fast speed inductance of 3.3 mH, which closely agree with the values expected for the machine. The motor windings insulation likewise appears to be good; the measured values of 2.4×10^8 ohms for the fast speed windings and 1.7×10^9 ohms for the slow speed windings exceed the standard minimum requirement of 1.48×10^6 ohms.

The resistance insulation for the slow speed winding appeared to be clean and dry, as indicated by the polarization index of 3.53. The fast speed winding, however, could be dirty; tests revealed a polarization index of 1. Industry standard recommended a minimum polarization index of 2. Fan motor AH-E-11B, which was restarted for fast speed operation, had a starting current of 954 amperes. The magnitude of this parameter is significantly less than the maximum designed value. The maximum expected locked rotor current with a line voltage of 495 volts is 1185 amperes. The running currents of 89.2 and 91.2 amperes obtained before and after the static test agreed with each other as well as with the data obtained during

periodic measurements made after the accident. The measured running currents are greater than the predicted value (84 amperes) under normal plant operating conditions and the preaccident values ranging from about 78 to 83 amperes, but they are significantly less than the motor's designed full load capability of 130 amperes.

Unit AH-E-11D was partially affected by the electrical noise. This motor, which had thermal overload tripping problems in its fast speed circuit, had informative data available only for its slow speed circuit. It had a dc resistance of 0.165 ohm across the slow speed T-leads, which compares closely to the startup value of 0.2 ohm. The inductance data, although slightly affected by noise, are consistent and compared closely to that of AH-E-11B; in the absence of baseline data, these values would appear to be typical. The insulation resistance of $\geq 2.5 \times 10^9$ ohms for both feeder circuits indicates that the motor windings insulation is intact and sound. Nevertheless, the polarization indices of 1.7 and 1.35 for the slow and fast speed windings, respectively, signify that the insulation might be damp or dirty.

The motor also started and operated normally at slow speed. The starting current of 778 amperes was less than the expected locked rotor current of about 847 amperes at 495 volts. The motor also had a running current of 76.6 amperes, a value significantly less than the full load rating of 132 amperes but more than the predicted value of 69 amperes under normal operating conditions and the preaccident value of 68.3 amperes. During a subsequent test to determine the integrity of the fast speed circuit, the motor likewise started normally and had a starting current of about 950 amperes. It also operated at high speed with a constant running current of about 92 amperes on all three phases. The operation, however, was short-lived; a thermal overload trip occurred on phases T11 and T13 after about 7 seconds of operation, confirming that the motor was not at fault as was suspected before the test.

Static testing of AH-E-11A and AH-E-11C was affected by almost identical noise patterns in their feeder circuits. Only dc resistance of their slow speed winding circuits and insulation resistance could be

obtained. Moreover, the measurable winding dc resistance fluctuated from 0.07 to 0.26 ohm, but the average of this range agrees closely with the startup data. The two motors' insulation resistances were greater than 1.8×10^9 ohms, which is greater than the startup value of 10^8 ohms and the standard minimum requirement for operation. The insulation of both motors is sound, but AH-E-11C may have slightly dirty insulation, as indicated by its polarization indices of 1.73 and 1.92. The polarization indices of AH-E-11A are 2.61 and 2.40, implying that the insulation is clean and dry.

Both AH-E-11A and AH-E-11C also exhibited normal starting and running currents. They had fast speed running currents of about 90 amperes, measured before they were shut down for the test; this measurement is significantly less than the full load rating. Motor AH-E-11A, which was restarted on slow speed, had a starting current of 802 amperes and a running current of 79 amperes. Motor AH-E-11C, which was restarted on fast speed had starting and running currents of 902 and 87.9 amperes, respectively.

Motor AH-E-11E was most affected by the electrical noise. Insulation resistance, starting current, and running current were the only meaningful parameters. The insulation resistance of 2.2 to 3.0×10^9 ohms indicates that the motor insulation is sound. The fast speed winding insulation also appeared to be clean and dry because the polarization index was greater than 2. The low speed winding insulation might be slightly dirty, as indicated by the polarization index of 1.83. The motor was restarted on fast speed and found to have a starting current of 830 amperes and running current of 89.9 amperes. These currents are also less than the full load rating.

All five Reactor Building air cooling fan motors are mechanically and electrically normal. The subtle degradation that was observed, specifically the reduced polarization index, is merely due to dirt on the insulation surface. This dirt is not attributable to the accident but to the lack of maintenance on the equipment. The slightly higher running currents are most likely due to:

1. Increased system pressure resulting from higher air density (see Figures 25 and 26)

2. Decreased flow resulting from improper operation of the inlet dampers

3. Decreased efficiency of the fans and motors resulting from greater friction losses, due to lubrication degradation, and from increased load losses and hydraulic losses.

Motor Operated Valves

Twenty-two motor operated valves, 18 of which are Class 1E, were tested. Seventeen are located in the Reactor Building basement and five are located at various elevations above ground level. The five valves located above ground level--CA-V1, CF-V1A, NS-V100, RC-V1, and WDL-V271--were tested once before gross decontamination.

The valves are operated by Limitorque operators, which are driven by Reliance Electric motors. The drive motors are squirrel cage induction units with sizes ranging from a fraction of horsepower to 10.5 horsepower. Their known electrical properties are summarized in Table 4.

A Limitorque valve operator is a gear drive assembly with integral gear driven rotary limit switches and torque switches. Typically, there are two rotary limit switches in each operator, each rotor having four contacts. In special cases, four sets of limit switches would be included. The limit switch contacts are numbered 1 through 16. Switch contacts 1 through 4 are on rotor 1, 5 through 8 on rotor 2, and so on. In addition to the 16 limit switch contacts are two torque switches, identified as 17 and 18, with 17 designated as the closing torque switch and 18 as the opening torque switch. Generally, rotor 1 is set to actuate at the fully open position of the valve, and rotor 2 is set to actuate at the fully closed position of the valve. Rotors 3 and 4 are set at other selected positions. Figure 27 illustrates a typical setting of the limit switches.

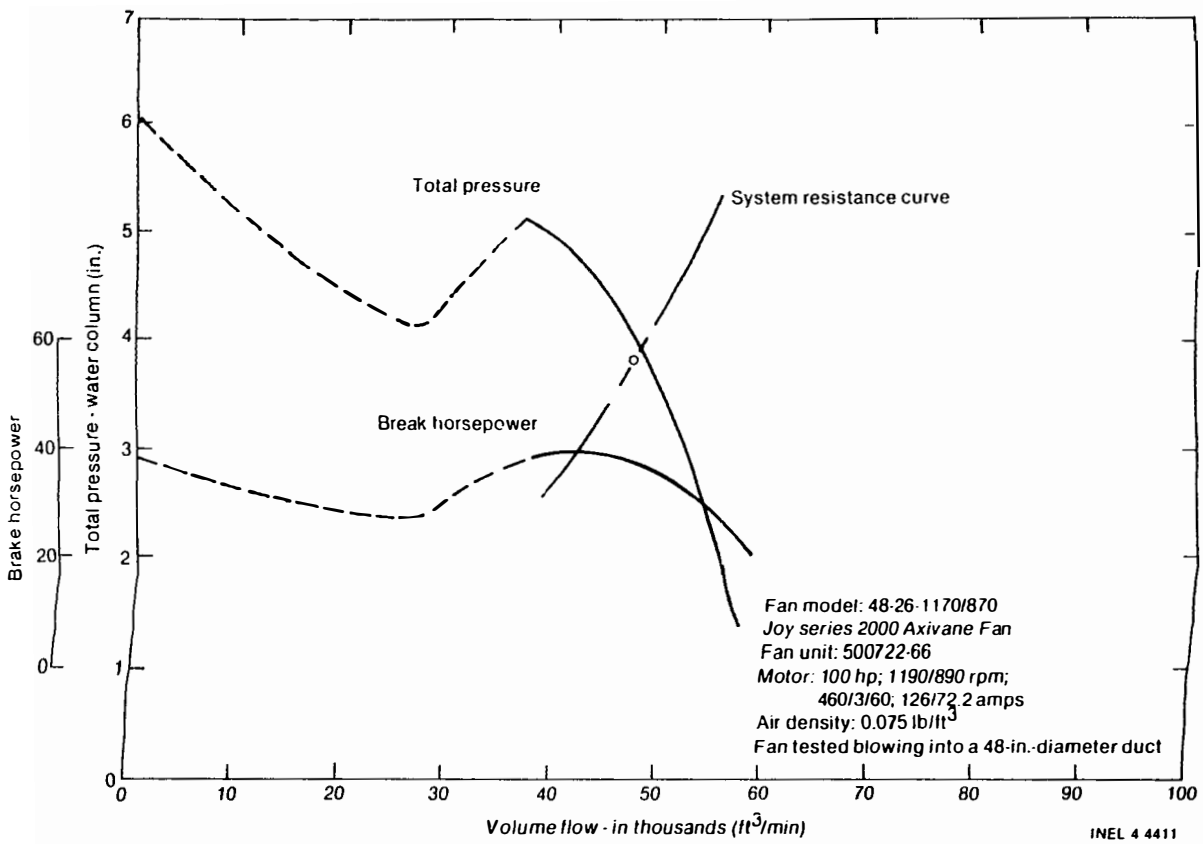

Figure 25. Characteristic curve of a TMI-2 Reactor Building air cooling fan with an air density of 0.075 lb/ft^3.

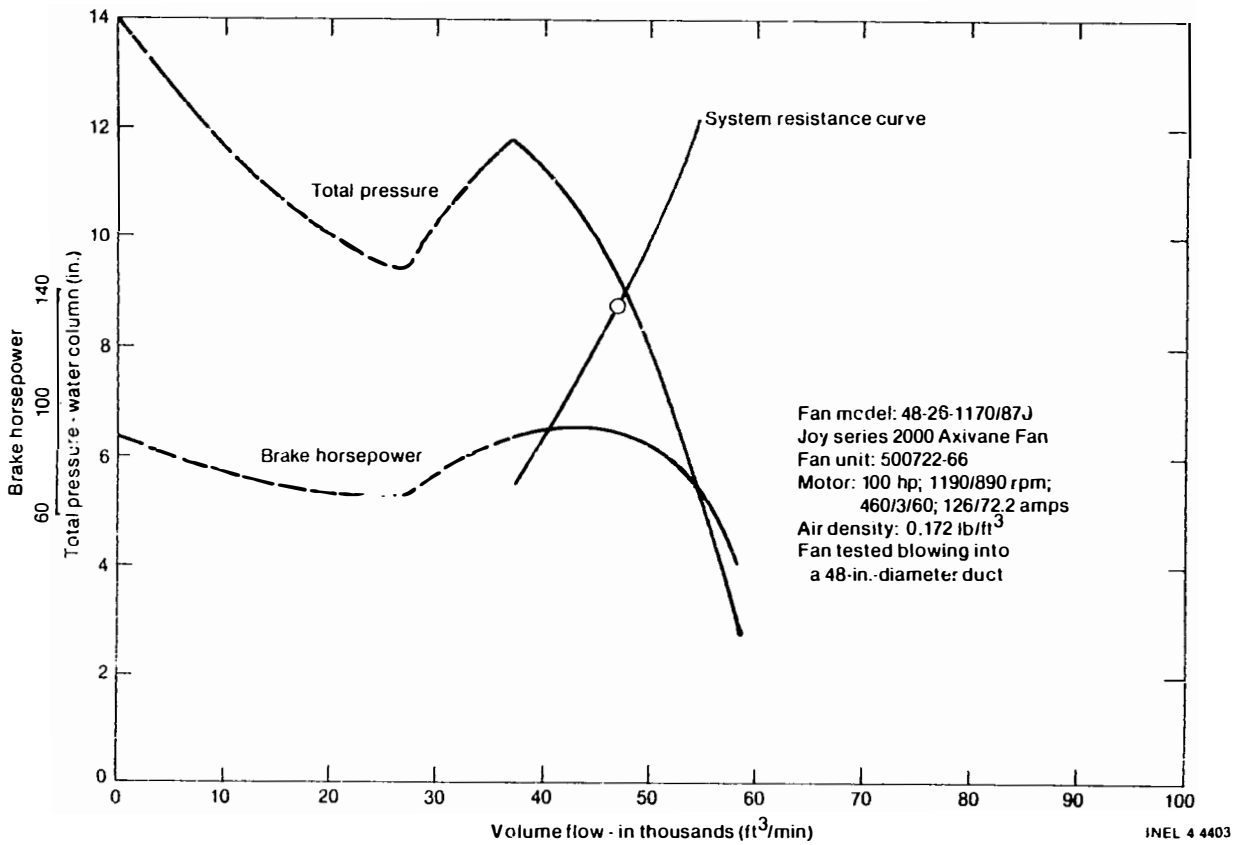

Figure 26. Characteristic curve of a TMI-2 Reactor Building air cooling fan with an air density of 0.172 lb/ft^3.

TABLE 4. PROPERTIES OF THE MOTOR OPERATED VALVE DRIVE MOTORS

Valve No.	Rated Hp	Rated Current/ Rated Voltage	RPM	Rated Torque (ft-lb)	Insulation Type (code letter)
CA-V1[a]	0.133	0.95A/460V	1800	2 ft-lb	RH
CA-V4A	0.133	0.95A/460V	1800	2 ft-lb	RH
CA-V4B	0.133	0.95A/460V	1800	2 ft-lb	RH
CA-V1A[a]	10.50	13.8A/460V	3600	80 ft-lb	RH
CF-V115	0.133	0.91A/480V	1800	2 ft-lb	RH
DC-V114	0.70	2.30A/460V	--	--	--
DH-V1	10.50	13.80A/460V	3600	80 ft-lb	RH
DH-V2	10.50	13.80A/460V	3600	80 ft-lb	RH
DH-V171	4.00	7.00A/460V	--	--	--
IC-V1A	0.33	0.95A/460V	1800	5 ft-lb	RH
IC-V1B	0.33	0.95A/460V	1800	5 ft-lb	RH
MU-V1A	1.30	2.75A/460V	1800	10 ft-lb	RH
MU-V1B	1.30	2.75A/460V	1800	10 ft-lb	RH
MU-V2A	1.30	2.75A/460V	1800	10 ft-lb	RH
MU-V2B	1.30	2.75A/460V	1800	10 ft-lb	RH
NS-V100[a]	0.70	2.20A/480V	1800	10 ft-lb	RH
RC-V1[a, b]	1.60	4.00A/460V	1800	25 ft-lb	RH
WDL-V7[a]	0.33	0.91A/460V	1700	--	RH
WDL-V22	0.333	0.91A/460V	1800	5 ft-lb	RH
WDL-V126[b]	0.67	0.91A/460V	1800	2 ft-lb	RH
WDL-V127[b]	0.67	0.91A/460V	1800	2 ft-lb	RH
WDL-V271[a]	0.133	0.55A/480V	--	--	--

a. Valves located above the 305-ft elevation. All others are located in the basement.

b. Valves are non-Class 1E units.

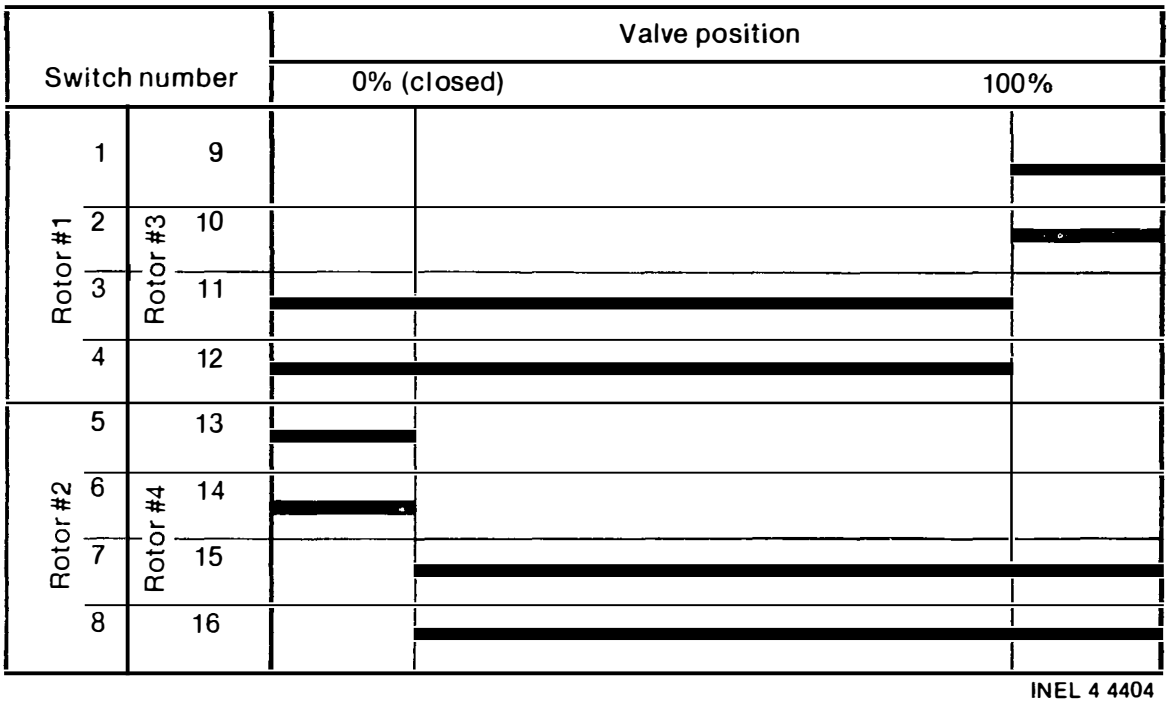

Figure 27. Typical limit switch setting of a Limitorque geared limit switch. The bold lines indicate the limit switch contact is closed.

For TMI-2, limit switch contacts 1, 3, 4, 5, and 7 and torque switches 17 and 18 are assigned standard functions. Contact 1 is used in the closing control circuit to bypass closing torque switch 17 when the valve is starting to close. Contact 5 is used in the opening control circuit to bypass opening torque switch 18 when the valve is fully closed. Contact 4 is also used in the opening control circuit to limit the valve from going beyond the fully open position, a necessary feature to prevent the valve from backseating. Contacts 3 and 7 are used for position indication. Figure 28 is a typical control schematic of a motor operated valve, illustrating the function of the various limit and torque switches.

Except for NS-V100, all of the valves were tested statically. Valve NS-V100 was tested statically and dynamically. It was stroked open and closed several times, during which the starting and running currents were measured.

Testing of the valve motors was relatively problem-free. In contrast, testing of the limit switch circuits was tarnished by the presence of high electrical noise. The electrical noise, 60 Hz of induced or directly coupled voltage, had values that varied from a few millivolts to several volts. Its effect was prominent on the limit switch circuits of DH-V171, IC-V1A, IC-V1B, and WDL-V7 to the point that no stable, meaningful data could be obtained.

The data collected indicate that the valve operators incurred varying degrees of degradation. This degradation was observed to be confined to the changes in the circuit's capacitance property. The evaluation of each valve motor operator and its associated limit switches is summarized below.

CA-V1

Valve operator CA-V1 was tested before Reactor Building gross decontamination in January 1982. During the initial test, the drive motor and associated limit switches exhibited no abnormalities, although the motor insulation resistance was marginal.

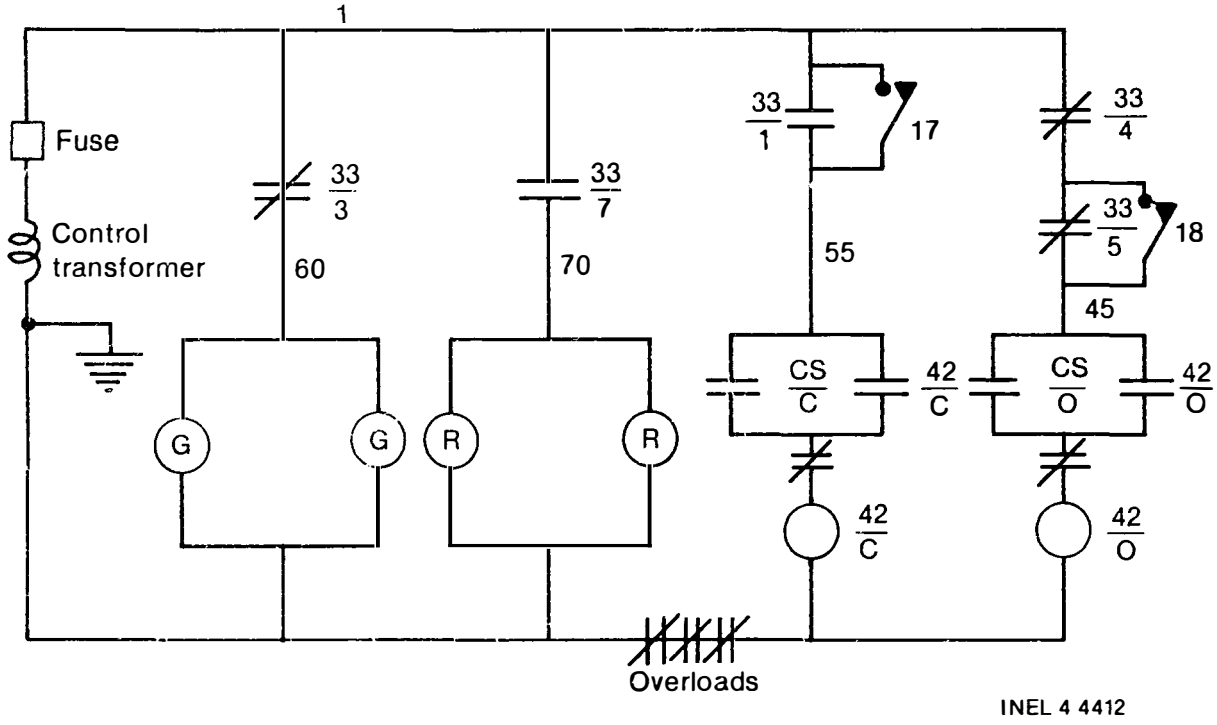

Figure 28. Typical control schematic of a motor operated valve. Limit switches are shown with the valve in the closed position.

The effective inductance of the motor windings obtained in early tests ranged from 205 to 217 mH, measured at 120 Hz and from 213 to 237 mH, at 1 kHz. These same parameters, obtained during the postdecontamination test and shown in Appendix A, indicate an increase as well as an inconsistency. Because the actual inductance of the motor did not change and the dc resistance remained the same at 38 ohms, the observed change in the circuit effective inductance was caused by a change in the circuit capacitance. The magnitude of the net inductance change suggests that a significant amount of capacitance was added to the circuit. Water, which has a high dielectric constant, may have caused the change in the circuit electrical property. The wetting is attributed to the gross decontamination. The inconsistency in effective inductance values was presumably caused by uneven distribution of the capacitive elements in the circuit.

The high insulation resistance of the motor windings, which suggests that the insulation is intact, mildly contradicts the above analysis that water is present in the network. While water is a poor insulator, the high insulation resistance reading of the motor winding circuit suggests that water has not diffused through the entire thickness of the insulation. The insulation is still intact, but its dielectric strength has degraded.

The limit switch internal circuits exhibited no abnormalities. The motor and limit switch cables are also normal.

Overall, the motor may still be operational but initially may have a slight phase current imbalance that will last until the motor windings dry.

CA-V4A

Test data indicate that both the motor operator and the limit switch circuits have a very low insulation resistance. Their circuit TDR signatures also exhibited a very distinct capacitive dip at the device end of the cable. Furthermore, the limit switches that were open had an abnormally high capacitance and low resistance across their contacts. The abnormalities suggested that the motor and limit switches were soaked and perhaps may have been underwater.

The motor circuits also exhibited a uniform dc resistance and inductance across each ase. However, these values are too unrealistically high to be considered valid.

The valve's operator suffered severe electrical degradation and cannot operate under its observed condition. With the degree of degradation the equipment experienced and the nature of the environmental conditions to which it was exposed, restoration is doubtful.

CA-V4B

This valve is located in the Reactor Building basement at the 293-ft, 6-in. elevation. Like CA-V4A, the winding inductance and dc resistance of the motor were unrealistically high. This valve, however, exhibited a good insulation resistance on both the motor and the limit switch circuits. The TDR signatures are also normal and agree well with the pattern expected of the termination.

Based mainly on test data and in the absence of reliable baseline data, the motor is believed to be inoperable. The high stator impedance reduces the motor breakdown torque, and the breakdown torque might not be adequate to overcome the load. The limit switches are in good condition.

Design drawings show that CA-V4A and CA-V4B are just several feet apart and on the same elevation. If they were installed as designed, the fact that CA-V4A was wet suggests that the valve's orientations are different and that CA-V4A may have been installed with the operator below the valve.

CF-V1A

This valve is located under the core flooding tank just a few feet above the ground floor at the 308-ft elevation. During the accident, CF-V1A was cycled once to effect the core flooding operation.

In situ test data obtained before gross decontamination indicated that the motor and limit switches suffered no ill effects from the accident. This finding was verified by similar data obtained after gross decontamination. Except for the relatively low polarization index of the motor insulation, an indication that the motor might be damp or dirty, all of the other measured electrical parameters are normal. Also, the TDR test showed no obvious evidence of degradation of the associated motor feeder and control cables. Furthermore, the motor, limit switches, and associated cables did not exhibit any degradation during the time between the two in situ tests.

Overall, the motor, limit switches, and associated cables are in good condition. The motor and limit switches should operate normally.

CF-V115

The motor and limit switches of CF-V115 suffered considerable degradation. Their TDR signatures had a capacitance dip at the cable end, and their insulation had a relatively low polarization index, an indication that both components were wet. The relatively low equivalent series resistance at 120 Hz and high effective inductance at 1 kHz of the motor are typical of an RLC network with highly capacitive elements, an effect most likely induced by water. Furthermore, the open circuits of limit switches 4 and 5 and torque switch 17 exhibited a relatively low dc resistance, which indicates a shunt is present in the circuit, presumably due to contamination tracking or water.

Although the motor may have been wet, its high insulation resistance suggests the insulation is still intact. By sufficient dryout, the motor may still be restored to normalcy. In its "as tested" condition, the motor may still operate within its designed parameters if the rotor is intact. The limit switches may likewise be able to perform their designed function, although with decreased reliability.

DC-V114

The motor of DC-V114 appeared to be one of those that may have been wet, though not submerged, but since may have partially dried out. The inconsistent effective inductance across the stator winding indicates the presence of high capacitance in the circuit, in this case across T1 and T2. The high capacitance was most likely caused by water in the circuit. The motor TDRs also exhibited a capacitive dip at the equipment end of the cable, another indication that the motor is wet.

The positions of the valve limit switches indicate that the valve torqued out in the intermediate position during its closing cycle. The limit switches also appeared to be wet, as indicated by the high capacitance and low dc resistance across the open switches and the capacitive dip on the TDR signatures at the device end of the cable.

Although the motor may be wet, its insulation is still intact. In its present condition, the motor may still be electrically operational, although initially an observable phase current imbalance may exist until the motor windings fully dry. Analyses indicate the observed electrical condition of the limit switches will compromise the device's designed functions.

Although the valve operator may still be intact, it failed to perform its designed function. The valve, which is a containment isolation valve of the cooling water return line of the reactor coolant leakage cooler, failed to fully close during Reactor Building isolation. An investigation of the maintenance history of the valve revealed that the operator closing torque switch was reset to 1 after the motor burned out at its initial setting of 1-1/2. The torque setting of 1 may have been too low to overcome the hydraulic forces acting on the valve.

DH-V1

DH-V1 appeared to have been only slightly affected by the accident. The consistent motor winding inductances and resistances indicated the motor incurred no buildup of capacitance. Likewise, the motor TDR

signatures were typical of a normal motor. The only affected motor parameter was the insulation. Although the insulation resistance was high, the polarization index was low, indicating that the insulation might just be dirty or damp.

The limit switches also appeared to be in good condition, with the exception of switch 3, across wires 45B and 60. Their TDR signatures were normal and commensurate with the termination. Conversely, switch 3 had a slightly elevated capacitance, which was also noticeable on the TDR signature. But the abnormality was so subtle that its effect on the circuit is insignificant.

Overall the condition of the motor and the limit switches is good, and the motor will operate normally if the rotor is intact.

DH-V2

The motor and limit switches of DH-V2 bore some evidence that they are wet. The motor, for instance, showed evidence of a slight capacitive dip at the cable end on the TDR traces and a low polarization index of the insulation. The wetting, however, appeared to be mild, as suggested by the uniform inductance and resistance across each phase. The high insulation resistance of the motor also indicated that the insulation is intact.

The low equivalent series resistance measured across the open limit switches indicated the presence of a high capacitance. This finding was demonstrated by the TDR signatures in which the trace dropped at the termination and then settled down to the measured resistance. The existence of highly capacitive elements strongly suggested that water is present in the circuit.

Overall, the motor is slightly degraded. Drying of the winding might bring the motor back to electrical normalcy. Even in its "as tested" condition, the motor may start and operate within its designed rating if the rotor is intact. The condition of the limit switches, however, may not

be as good as that of the motor; the equivalent series resistance of the open circuits was of such a low value that their function could be compromised.

DH-V171

DH-V171 is one of the few valves located in the Reactor Building basement that was unaffected by the accident. All of the motor's measured parameters appeared to be normal. Even the insulation polarization index measured surprisingly at 3, an indication that the insulation is clean and dry. This condition was unexpected for a valve located in that area. Due to the presence of high electrical noise in the circuits, insufficient data were obtained for the limit switches; but the data that were available indicated no device abnormalities. The TDR patterns also were normal.

IC-V1A

The motor of IC-V1A appeared to have degraded severely. Tests revealed a significant buildup of capacitance and shunting or shorting of turns within the motor windings, with the net effect of a reduced impedance that is unacceptable for operation. The capacitance buildup was indicated by the nonuniform effective inductance, low parallel resonance, and capacitive dip on the TDR trace at the equipment end of the cable. The shunting or shorting of the turns was indicated by the decreased dc resistance (to 33 ohms) of the windings. The resistance measured during startup was 40 ohms. The insulation resistance was high, suggesting that the insulation is still intact but may just be wet. The wetting also may have caused the capacitance increase.

The presence of high electrical noise constrained data acquisition; only the dc resistance and TDR could be measured on the limit switches. An extremely noisy circuit is usually due to a fault in the circuit. This insufficiency of data precludes a better understanding of the condition of the components. Nonetheless, based on the data available, indications are the open limit switches may also be contaminated with capacitive elements

that are evident on the TDR traces. The TDR traces of the limit switches did not rise to the point corresponding to a termination of infinite resistance. Instead they settled at reflection coefficient levels slightly different from zero, an indication that the cable terminates at circuits with equivalent series resistances almost the same as the cable characteristic impedance.

The motor may still be restored to electrical normalcy by drying the windings. Under its present condition, the motor appears to be in an inoperable state. Likewise, the limit switches evidently have a low equivalent series resistance, too low for satisfactory operation.

IC-V1B

Both the motor and limit switches of IC-V1B are soaked, as indicated by their low insulation resistances, which are in the kilohm range. Much of the length of the associated in-containment power and control cables also appeared to be soaked, with the TDR traces showing a continuous drop in the reflection coefficient. A low real resistance shunt detected across the open limit switches, ranging from 38 to 73 ohms, is a likely indication of contamination tracking.

Overall, the failure of the motor and limit switches can be classified as catastrophic because under no circumstances would the equipment have started and operated satisfactorily. From all indications, the equipment was underwater.

MU-V1A

The inductance and resistance of the MU-V1A motor are consistent at both test frequencies, indicating that the motor is intact and free of contamination. The winding insulation is also good, but a low polarization index and a slight capacitive dip on the TDR traces suggest that the motor windings may be damp.

The limit switches are also good. All of the measured parameters are normal and consistent.

Overall, the motor and limit switches are electrically normal, and they should operate normally under their present condition.

MU-V1B

The motor of MU-V1B evidently is in good condition. The inductance and resistance values are uniform at the test frequencies at which they were measured. The effective inductance at 1 kHz for MU-V1B is significantly lower than that of MU-V1A. The difference between these two parameters indicates that there is a higher stray capacitance in MU-V1B than in MU-V1A. However, because the motor is operated at 60 Hz, the capacitance would have little effect on its ability to function. Also, the insulation is intact, although it might be slightly damp, as indicated by the low polarization index and the capacitive dip on the TDR trace.

The limit switches evidently suffered significant wetting; switch 3 (circuit 1-60) exhibited an abnormally high capacitance of 52.5 μF. Water may also have caused the equivalent series resistance to drop to a very low value. Furthermore, the contamination created a low ohmic resistance path. Capacitive contamination appeared around some of the closed switches. This phenomenon was evident on the TDR signature, in which the trace at the cable end decayed down slightly and then leveled off at slightly less than the 50-ohm reference (reflection coefficient of zero).

Although the motor stator winding is wet, the motor may start and operate normally, even without drying the motor, if the rotor is sound. The limit switch, on the other hand, may be too contaminated to provide reliable control and display information.

MU-V2A

The inductance, resistance, and insulation resistance of the motor stator windings indicated a slight abnormality. The windings may be a little damp, as suggested by the polarization index of 1 and the slight

capacitive dip on the TDR trace. Also, the inductance of T2-T3 slightly deviated. However, the deviation was so insignificant that it could be inherent to the equipment, and its effect on the operability of the motor is negligible.

The limit switches are somewhat contaminated with capacitive and resistive elements. Circuit 1-45 (switches 4, 5, and 18) exhibited a slightly higher than normal capacitance and a low equivalent series resistance and dc resistance. There is also a capacitive dip on the TDR trace of circuits 1-45 and 1-60.

Overall, the motor may operate normally, even without drying the stator windings, as long as the rotor is still intact. On the other hand the limit switches are contaminated to such a degree that control and display information from them may be unreliable.

MU-V2B

This motor appears to be normal in almost all aspects of measurement. The relatively low polarization index of 1.2 and apparent capacitive dip at the motor termination on the TDR are the two parameters that characterize the motor as other than perfectly normal. There is also a subtle inconsistency of the stator winding inductance, but this discrepancy may be inherent to the machine and not attributable to the accident.

The limit switches are normal in all aspects. The inductance, resistance, capacitance, insulation resistance, and TDR data agree well with the cable length and type of termination at the cable end.

The motor and the limit switches exhibited no ill effects of the accident. The slight degradation of the motor is considered normal for its application and for the maintenance it received. The abnormality will not affect the operability of the equipment.

NS-V100

Valve NS-V100 is the only one that was stroked. In the static test, the motor exhibited a reasonable but slightly inconsistent inductance, consistent equivalent series and dc resistances, high insulation resistance, normal TDR trace, but low insulation polarization index. The limit switches exhibited normal characteristics in the valve's closed and open positions. The test also revealed a subtle increase in the inductance of the motor since the predecontamination test. During the initial test, the motor was found to have the following inductances: 133.4 mH for T1-T2, 118.1 mH for T2-T3, and 134.8 mH for T1-T3. This change may have been caused by a change in the motor capacitance, evidently as a result of water spraying from the decontamination operation.

As in the first test, the second dynamic test of the valve was characterized by a slight phase current imbalance of the motor. The motor, which is rated for 2.2 amperes at 480 volts, drew 1.9, 1.9, and 2.2 amperes for phases T1, T2, and T3, respectively, with an impressed voltage of approximately 490 volts. The phase current cannot be directly related to the measured winding inductance because the latter accounts only for the stator winding inductance and the rotor reactance at standstill, while the former also takes into account the no-load conductance and susceptance with the rotor rotating, as well as the load.

Although changes occurred in the electrical parameters of the motor, they were so subtle that its operational characteristics remained unaffected. The phase current imbalance presumably is inherent to the machine.

RC-V1 (Non-Class 1E)

The motor of valve RC-V1 appeared to be normal in all aspects. The winding inductance and resistance are uniform, the insulation resistance is high, and the TDR trace followed a pattern normal to the termination. Furthermore, the motor did not appear affected by the gross decontamination that took place between the two tests.

Except for switches 10 and 15 (circuit 1-80), all of the switches exhibited normal parameters. Their insulation resistances, TDR signatures, and inductances agreed well with the pattern expected of their termination. Switches 10 and 15, which are connected in series and are in an open circuit state, have an equivalent series resistance calculated to be greater than 5000 ohms, a value that would have little effect on the switches' functions.

Overall, the motor and the limit switches fared well with the accident. The motor in particular did not show any ill effects of the accident's harsh environment. The limit switches, although slightly contaminated with capacitive elements, are still electrically functional.

WDL-V7 (Non-Class 1E)

The motor of WDL-V7 is one of the few that exhibited no ill effects of the harsh Reactor Building basement environment. Except for the relatively low polarization index of 1.12, which might be due to dirty windings, the motor appeared to be electrically normal.

The limit switches, except those across circuit 1-55 (switch 1 and closing torque switch 17), likewise showed no evidence of degradation. The elevated capacitance across circuit 1-55 and the slight capacitive dip at the cable end on the TDR trace indicated that the switches are wet.

Overall, the motor and limit switches are electrically intact and operational. The degradation in circuit 1-55 is too subtle to affect the function.

WDL-V22

WDL-V22 is one valve that was perhaps underwater. The data obtained on the motor and the limit switches indicate the components are soaked. The anomalies observed are so gross that the components may have degraded beyond the point of restoration. The low insulation resistance of a mere 1100 ohms and pronounced capacitive dip on the TDR signature are signs that

the insulation may have totally failed. Also, a low resistance shunt buildup was measured across the open limit switches, further evidence of the grossly degraded condition of the components.

WDL-V126 (Non-Class 1E)

The motor of WDL-V126 appeared to be intact. It had a high insulation resistance, consistent equivalent series resistance and dc resistance, and normal TDR pattern. The slightly inconsistent effective inductance, as has been observed on other motors, is also attributed to capacitance buildup presumably perpetrated by moisture.

The limit switches are, in all aspects, free of abnormalities.

Overall, the motor and limit switches are sound. The slight abnormalities that were observed are either inherent to the components or are from normal degradation due to aging and lack of maintenance. The abnormalities do not appear to have any effect on the ability of the components to satisfactorily perform their intended function.

WDL-V127 (Non-Class 1E)

The test data obtained on the motor and limit switches of WDL-V127 have the same patterns as those of WDL-V126. Their evaluation is likewise the same.

WDL-V271

Both the motor and the limit switches of WDL-V271 appeared to be normal. The motor winding inductances were reasonable and uniform and the TDR traces were normal. The insulation polarization index, however, was relatively low (1.2), indicating the windings are just dirty. The limit switches are normal in all aspects.

The motor and limit switches, likewise, did not appear to have been affected by the gross decontamination and subsequent cleanup operations.

Overall, the motor and the limit switches did not appear to have been affected by the accident. From all indications, the motor and limit switches will operate normally.

Evaluation Summary

In summary, although most of the motors and limit switches located in the Reactor Building basement incurred some damage due to high humidity and submersion in water, only five motors appeared to have totally failed. These units likely will not operate at all without extensive restoration. The other devices, although degraded, were affected to a lesser degree and may still be able to perform their designed functions. The valves located above the ground level incurred no appreciable degradation as a result of the accident.

CONCLUSIONS

The in situ tests revealed three significant findings:

1. High humidity and wetting are the principal elements that caused many components to deteriorate and fail

2. Except for the components that failed due to submersion, the failed components are located in D-ring A or are associated with reactor coolant pumps RC-P-1A and RC-P-2A

3. Except for the components that failed due to submersion, the failed components are non-Class 1E.

High humidity and wetting brought about failure of Reactor Building components in two respects. First, water was absorbed into the component insulation system, subsequently lowering the resistance and dielectric strength, together bringing about a condition unacceptable for operation. Second, exposed (uninsulated) joints, splices, and interfaces corroded, causing several circuits to exhibit an open circuit and, in milder cases, an elevated circuit resistance. The effects of both failure mechanisms ranged from mild to catastrophic. Eleven pieces of equipment suffered catastrophic failure. Motor operated valves CA-V4A, CA-V4B, IC-V1A, IC-V1B, and WDL-V22 incurred insulation breakdowns evidently resulting from submersion. The backup oil lift pump motor of RC-P-1A, the motor differential CT of RC-P-1A, vibration switches RC67-VS1 and RC67-VS2, pressurizer PORV RC-R2, and a limit switch of AH-V6 each incurred a break in its circuit, either within the equipment proper or in the inner penetration box through which its respective cabling passes. Milder cases of deterioration--such as dielectric strength decline and elevated capacitance and resistance--although not categorized as causing total failure, could compromise the proper functioning of the device or component.

Most of the components that failed from causes other than submersion are located in D-ring A or have their cabling passing through below-ground-level penetrations in the southwest quadrant of the Reactor

Building. The backup oil lift pump motor of RC-P-1A, vibration switches RC67-VS1 and RC67-VS2, and PORV RC-R2 are all located in D-ring A, with their points of anomalies located within or near the equipment. The motor differential CT of RC-P-1A and the field circuit of the RC-P-1A backup oil lift pump motor have their circuit break in inner penetration boxes R405 and R400. Although there is no concrete evidence that the environmental condition in D-ring A has been more severe, the failure patterns indicate it to have been so. The penetration boxes, for example, were exposed to steam exhausted through the rupture diaphragm into their area during the accident.

Except for the AH-V6 limit switch and the submerged motor operated valves, the components that failed are non-Class 1E. The limit switch failure was the result of its initial, perhaps defective state, compounded by high humidity during the accident. The non-Class 1E units are suspected to have failed not because of their design but because of the condition of their circuit makeup. Exposed connections in the penetration box and in the device termination and junction boxes made their circuits vulnerable to failure, specifically from corrosion.

Overall, the electrical components and devices fared well with the accident. Even those components located in the basement incurred minimal electrical degradation unless submerged. Those that failed did so under conditions that are not unique. Because corrosion can take place whenever the relative humidity is 100%, unprotected components are vulnerable. Terminal block connections, for example, are considered the weakest points in any electrical circuit because of their exposed terminals. Because of their vulnerability to corrosion, their use in an environment whose relative humidity could reach 100% must be minimized or at best totally avoided. Sealed splices should be used for all connections in environments subject to 100% humidity.

REFERENCES

1. F. T. Soberano, Testing and Examination of TMI-2 Electrical Components and Discrete Devices, GEND-INF-034, November 1982.

2. J. A. Gannon, Evaluation of TMI-2 Pressure Switches NM-PS-1454 and NM-PS-4174, GEND-INF-041, November 1983.

3. F. T. Soberano, Evaluation Results of TMI-2 Solenoids AH-V6 and AH-V74, GEND-INF-045, January 1984.

APPENDIX A

DATA FROM POSTDECONTAMINATION IN SITU TESTS OF ELECTRICAL COMPONENTS AND DEVICES

TABLE A-1. POSTDECONTAMINATION IN SITU TEST DATA OF ELECTRICAL COMPONENTS AND DEVICES

Device Identification Number	Test Point	Inductance/Capacitance 120 Hz Series	120 Hz Parallel	1 kHz Series	1 kHz Parallel	Dissipatio Factor 120 Hz	1 k
AH-LS-5006	--	--	--	--	--	Noisy circu	
AH-LS-5007	--	--	--	--	--	Noisy circu	
AH-LS-5008	--	--	--	--	--	Noisy circu	
NM-PS-4174 & NM-PS-4175	--	--	--	134.5 μH	--	--	-
AH-KS-5000	--	160 μH	--	153.5 μH	--	--	-
AH-KS-5001	--	--	48 nF	--	44 nF	--	-
AH-KS-5002A	--	153.0 μH	--	152.3 μH	--	--	-
AH-KS-5003	--	--	--	--	--	Noisy circu	
AH-KS-5004	--	--	27.0 nF	--	25.0 nF	--	-
RC67-VS1	A3VSP-A3VS	--	--	122 μH	--	--	-
	A3TVR-A3VSN	--	--	--	--	Noisy circu	
RC67-VS2	B4VSP-B4VS	--	46.1 nF	--	42.7 nF	0.055	0.
	B3TVR-B4VSN	--	37.5 nF	--	34.4 nF	0.130	0.
RC67-VS3	B3VSP-B3VS	--	--	--	--	Noisy circu	
	B3TVR-B3VSN	--	--	--	2.5 nF	--	-
RC67-VS4	A4VSP-A4VS	--	--	--	27.0 nF	--	0.
	A4TVR-A4VSN	--	--	--	--	Noisy circu	
AH-EP-5037 &	64-N	492.7 mH[a]	547 mH	310.6 mH	542 mH	0.332	0.
AH-KS-5037	65-H	90 μH	--	89.5 μH	--	--	-
(AH-V2B)	66-H	--	--	--	21.3 nF	--	0.
AH-EP-5040 &	74-N	473.6 μH[a]	523.0 mH	311.0 mH	530 mH	0.323	0.
AH-KS-5040	75-H	236 μH	--	200 μH	--	7.98[a]	1.
(AH-V3A)	76-H	--	23.8 nF	--	23.8 nF	--	0.
AH-V6[a]	14-N	--	--	--	--	--	-
	15-H	--	--	--	--	--	-
	16-H	88.0 μH	--	88.3 μH	--	--	-
RC-R2	Coil	3.74 H[a]	3.90 H	29.9 μF[a]	29.7 μF	0.206	0.
	LS3	150 μH	--	112.0 μH	--	124[a]	18.
	LS7	--	13.9 nF	--	14.15 nF	--	-

VICES

Dissipation Factor		Equivalent Series Resistance (Ohms)				DC Resistanc (Ohms)	Insulation Resistance (Ohms)
		120 Hz		1 kHz			
120 Hz	1 kHz	Series	Parallel	Series	Parallel		
Noisy circuit		--	--	--	--	560	8.1×10^7
Noisy circuit		--	--	--	--	1.37	7.9×10^7
Noisy circuit		--	--	--	--	12.2	5.4×10^7
--	--	--	--	--	--	2.13	3.4×10^7
--	--	--	--	--	--	2.29	1.8×10^8
--	--	--	--	--	--	--	7.5×10^8
--	--	--	--	--	--	2.23	1.5×10^8
Noisy circuit		--	--	--	--	1.18	4.9×10^8
--	--	--	--	--	--	--	2.2×10^8
--	--	--	--	--	--	2.2	$>5.0 \times 10^7$
Noisy circuit		--	--	--	--	Infinity	
0.055	0.071	--	--	--	53.2 k	Infinity	$>2.8 \times 10^6$
0.130	0.085	--	--	--	53.0 k	560 k	
Noisy circuit		--	--	--	--	Infinity	$>4.0 \times 10^7$
--	--	--	--	--	--	1042	
--	0.015	--	--	--	--	Infinity	$>3.0 \times 10^7$
Noisy circuit		--	--	--	--	1016	
0.332	0.863	123.1[a]	1240	1.68 k[a]	3.94 k	57.4	2.0×10^8
--	--	--	--	1.377	--	1.24	$>10^8$
--	0.07	--	--	--	--	Infinity	
0.323	0.838[a]	113.4[a]	1200	1638[a]	3.97 k	56.41	$>10^8$
7.98[a]	1.20	1.42	--	1.50	--	1.26	$>3.4 \times 10^8$
--	0.06	--	--	--	--	Infinity	
--	--	--	--	--	--	--	--[b]
--	--	--	--	--	--	1.27	--[c]
--	--	--	--	--	--	3.72	--[c]
0.206	0.088	581	--	--	--	301.22	5×10^8
124[a]	18.9	14.01	--	13.93	--	13.48	4.0×10^9
--	--	--	--	--	--	Infinity	5.8×10^9

TABLE A-1. (continued)

Device Identification Number	Test Point	Inductance/Capacitance 120 Hz Series	120 Hz Parallel	1 kHz Series	1 kHz Parallel	Dissipation Factor 120 Hz	Dissipation Factor 1 kHz
RC56-PS1	2967A-B	137 μH	--	135.5 μH	--	>20	--
RC58-FS1	2959A-B	--	--	--	18.4 nF	--	0.336
RC59-FS1	2975A-B	140 μH	--	138.0 μH	--	>20	--
RC60-LS1	2979A-B	140 μH	--	138.4 μH	--	>20	--
RC60-LS2	2982A-B	--	--	--	10.0 nF	--	0.45
RC56-PS6	2968A-B	128 μH	--	127.8 μH	--	>20	--
RC58-FS3	2960A-B	--	--	--	--	Noisy circuit	
RC58-FS3	2976A-B	130 μH	--	128.6 μH	--	>20	--
RC60-LS3	2980A-B	--	--	--	--	Noisy circuit	
RC60-LS4	2983A-B	128.0 μH	--	127.9 μH	--	>20	--
RC56-PS11	2969A-B	107.0 μH	--	106.2 μH	--	>20	--
RC58-FS5	2961A-B	--	--	--	--	Noisy circuit	
RC59-FS5	2977A-B	110.0 μH	--	108.5 μH	--	>20	--
RC60-LS5	2981A-B	108.0 μH	--	108.0 μH	--	>20	--
RC60-LS6	2984A-B	107.0 μH	--	106.7 μH	--	>20	--
RC56-PS16	2970A-B	108.0 μH	--	106.2 μH	--	>20	--
RC58-FS7	2962A-B	--	--	--	--	Noisy circuit	
RC59-FS7	2978A-B	109.0 μH	--	107.3 μH	--	>20	--
RC60-LS7	2985A-B	--	--	--	--	Noisy circuit	
RC60-LS8	2986A-B	108.0 μH	--	107.8 μH	--	--	--
RC-P-1A motor	T1-T2	6.56 mH	--	5.03 mH	--	0.249	0.180
	T1-T3	6.53 mH	--	5.02 mH	--	0.254	0.176
	T2-T3	6.54 mH	--	5.01 mH	--	0.246	0.177
RC-P-1A motor differential CT[f]	A3CM0-CM1	--	45.6 nF	--	45.5 nF	--	0.094
	A3CM0-CM2	2.78 mH	--	1.74 mH	--	0.282	0.136
	A3CM0-CM3	--	--	--	--	--	--
	A3CM1-CM2	--	--	--	--	--	--
	A3CM1-CM3	--	--	--	--	--	--
	A3CM2-CM3	--	--	--	--	--	--
RC-P-1A motor power monitoring CTs & PTs[h]	A3RC1-RC2	--	--	--	--	--	--
	A3RP1-RP2	1008 μH	--	--	--	--	--
	A3GC1-GC2	--	1965 mH	--	1233 mH	0.631	1.619
	A3GP1-GP2	12.99 mH	--	1.86 mH	--	0.783	0.023

Dissipation Factor		Equivalent Series Resistance (Ohms)				DC Resistance (Ohms)	Insulation Resistance (Ohms)
		120 Hz		1 kHz			
0 Hz	1 kHz	Series	Parallel	Series	Parallel		
0	--	5.4	--	--	--	4.98	--[d]
--	0.336	--	--	--	--	Infinity	--[d]
0	--	5.55	--	--	--	5.12	--[d]
0	--	5.5	--	--	--	5.10	--[d]
--	0.45	--	--	--	--	Infinity	--[d]
0	--	4.96	--	4.96	--	4.71	9×10^7
oisy circuit		--	--	--	--	Infinity	2.7×10^7
0	--	4.96	--	--	--	4.71	1×10^8
oisy circuit		--	--	--	--	Infinity	2.2×10^7
0	--	4.89	--	--	--	4.64	7.6×10^8
0	--	4.15	--	4.15	--	3.91	--[d]
oisy circuit		--	--	--	--	Infinity	--[d]
0	--	4.15	--	4.15	--	3.91	--[d]
0	--	4.06	--	4.06	--	3.81	--[d]
0	--	4.10	--	4.10	--	3.90	--[d]
0	--	4.2	--	4.2	--	3.88	2.2×10^7
oisy circuit		--	--	--	--	Infinity	8×10^7
0	--	4.25	--	4.25	--	3.90	1.4×10^7
oisy circuit		--	--	--	--	Infinity	9.0×10^7
--	--	4.47	--	4.47	--	3.81	1.3×10^8
0.249	0.180	--	--	--	--	0.07	2.5×10^6, and PI = 1.0[e]
0.254	0.176	--	--	--	--	0.07	
0.246	0.177	--	--	--	--	0.07	
--	0.094	--	--	--	--	Infinity	NA--A3CMO is grounded[g]
0.282	0.136	--	--	--	--	2.01	
--	--	--	--	--	--	1.92	
--	--	--	--	--	--	4.74	
--	--	--	--	--	--	4.65	
--	--	--	--	--	--	1.26	
--	--	--	--	--	--	2.17	NA--CTs and PTs are grounded
--	--	--	--	--	--	1.97	
0.631	1.619	--	--	--	--	1.26	
0.783	0.023	--	--	--	--	1.20	

TABLE A-1. (continued)

Device Identification Number	Test Point	Inductance/Capacitance 120 Hz Series	120 Hz Parallel	1 kHz Series	1 kHz Parallel	Dissipatio Factor 120 Hz	1 k
RC-P-2A motor	T1-T2	6.46 mH	--	5.53 mH	--	0.243	0
	T1-T3	6.45 mH	--	5.53 mH	--	0.246	0
	T2-T3	6.46 mH	--	5.42 mH	--	0.259	0
RC-P-2A motor differential CT	B4CM0-CM1	5.41 mH	--	2.66 mH	--	0.728	0
	B4CM0-CM2	--	--	--	41.0 nF	--	
	B4CM0-CM3	--	--	--	41.3 nF	--	
	B4CM1-CM2	--	--	--	41.4 nF	--	
	B4CM1-CM3	--	--	--	41.3 nF	--	
	B4CM2-CM3	--	--	--	33.9 nF	--	
RC-P-2A motor power monitoring CTs & PTs	B4RC1-RC2	--	--	--	--	--	
	B4RP1-RP2	--	--	641 μH	--	--	0
	B4GC1-GC2	--	1122 mH	--	900 mH	0.505	1
	B4GP1-GP2	--	--	543 μH	--	--	0
RC-P-2B motor	T1-T2	6.51 mH	--	5.00 mH	--	0.231	0
	T1-T3	6.52 mH	--	5.01 mH	--	0.232	0
	T2-T3	6.52 mH	--	5.00 mH	--	0.232	0
RC-P-2B motor differential CT	B3CM0-CM1	--	--	--	--	--	
	B3CM0-CM2	--	--	--	--	--	
	B3CM0-CM3	--	--	--	14.0 mH	--	1
	B3CM1-CM2	--	50.0 mH	--	16.0 mH	0.754	0
	B3CM1-CM3	--	--	--	20.1 mH	--	0
	B3CM2-CM3	--	--	--	17.8 mH	--	0
RC-P-2B motor power monitoring CTs & PTs	B3RC1-RC2	1016 mH	--	--	0.496	--	
	B3RP1-RP2	--	--	708 μH	--	--	1
	B3GC1-GC2	--	1982 mH	171 mH	--	0.639	0
	B3GP1-GP2	--	--	--	--	--	
RCP-2-1A-1	T1-T2	441 mH[a]	485 mH	329 mH[a]	342 mH	0.315	0
	T1-T3	417 mH[a]	455 mH	311 mH[a]	323 mH[a]	0.301	0
	T2-T3	387 mH[a]	424 mH	298 mH[a]	308 mH	0.309	0
RCP-2-1A-2	T1-T2	416 mH[a]	454 mH	312 mH[a]	323 mH	0.301	0
	T1-T3	440 mH[a]	478 mH	326 mH[a]	339 mH	0.293	0
	T2-T3	384 mH[a]	421 mH	292 mH[a]	302 mH	0.311	0
RCP-2-2A-1	T1-T2	428 mH[a]	465 mH	324 mH[a]	337 mH	0.293	0
	T1-T3	457 mH[a]	496 mH	337 mH[a]	351 mH	0.292	0
	T2-T3	398 mH[a]	435 mH	304 mH[a]	315 mH	0.307	0

el	Dissipation Factor		Equivalent Series Resistance (Ohms)				DC Resistance (Ohms)	Insulation Resistance (Ohms)
			120 Hz		1 kHz			
	120 Hz	1 kHz	Series	Parallel	Series	Parallel		
	0.243	0.207	1.19	--	7.15	--	0.06	7×10^6, and PI = 1.0
	0.246	0.206	1.19	--	7.07	--	0.08	
	0.259	0.260	1.22	--	8.77	--	0.08	
	0.728	0.199	2.89	--	9.22	--	1.60	NA--B4CMO is grounded
nF	--	--	--	--	--	--	Infinity	
nF	--	--	--	--	--	--	Infinity	
nF	--	--	--	--	--	--	Infinity	
nF	--	--	--	--	--	--	Infinity	
nF	--	--	--	--	--	--	Infinity	
	--	--	--	--	--	--	1.94	NA--CTs and PTs are grounded
	--	0.576	2.24	--	2.3	--	1.75	
	0.505	1.963	--	1.66 k	--	2.89 k	1.14	
	--	0.433	1.114	--	1.47	--	0.91	
	0.231	0.178	--	--	--	--	0.07	7.6×10^6, and PI = 1.0
	0.232	0.177	--	--	--	--	0.08	
	0.232	0.178	--	--	--	--	0.07	
	--	--	--	--	--	--	0.83	NA--CTs and PTs are grounded
	--	--	--	--	--	--	0.80	
H	--	1.178	--	--	--	--	0.80	
H	0.754	0.868	--	--	--	--	0.88	
H	--	0.96	--	--	--	--	0.87	
H	--	0.93	--	--	--	--	0.87	
	--	--	--	--	--	--	2.02	NA--B3CMO is grounded
	--	1.836	--	--	--	--	1.88	
	0.639	0.843	--	--	--	--	0.95	
	--	--	--	--	--	--	0.66	
	0.315	0.201	106.5[a]	1182	415[a]	10.69 k	40.58	$>10^{14}$
	0.301	0.193	95[a]	1143	372[a]	10.36 k	40.71	
	0.309	0.185	90.4[a]	1037	342[a]	10.32 k	41.55	
	0.301	0.189	94.6[a]	1139	366[a]	10.61 k	38.95	$>10^{11}$
	0.293	0.200	97.5[a]	1233	406[a]	10.56 k	38.96	
	0.311	0.182	90.0[a]	1020	332[a]	10.34 k	38.92	
	0.293	0.200	94.2[a]	1192	410[a]	10.66 k	38.0	$>10^{12}$
	0.292	0.207	100.8[a]	1283	431[a]	10.49 k	38.0	
	0.307	0.194	92.2[a]	1071	369[a]	10.17 k	38.3	

TABLE A-1. (continued)

Device Identification Number	Test Point	Inductance/Capacitance 120 Hz Series	120 Hz Parallel	1 kHz Series	1 kHz Parallel	Dissipation Factor 120 Hz	Dissipation Factor 1 kHz
RCP-2-2A-2	T1-T2	427 mH[a]	464 mH	323 mH[a]	336 mH	0.294	0.200
	T1-T3	390 mH[a]	426 mH	301 mH[a]	312 mH	0.306	0.192
	T2-T3	443 mH[a]	481 mH	332 mH[a]	346 mH	0.291	0.207
RCP-2-2B-1	T1-T2	461 mH[a]	498 mH	346 mH[a]	362 mH	0.283	0.216
	T1-T3	425 mH[a]	461 mH	322 mH[a]	336 mH	0.293	0.205
	T2-T3	462 mH[a]	500 mH	342 mH[a]	358 mH	0.288	0.217
RC-P-1A	A1-A2	--	--	--	--	--	--
BUOL pump motor	F1-F2	--	--	--	--	--	--
RC-P-2A	A1-A2	37 mH	60 mH	--	13.5 mH	0.714	0.206
BUOL pump motor	F1-F2	--	--	--	--	--	--
RC-P-1B	A1-A2	--	--	--	13.9 mH	--	0.300
BUOL pump motor	F1-F2	--	--	--	7.24 nF	--	0.438
RC-P-2B	A1-A2	5.57 mH	--	8.04 mH	--	0.672	0.291
BUOL pump motor	F1-F2	--	--	--	--	--	--
AH-E-11A	T1-T2	--	--	--	--	--	--
	T1-T3	--	--	--	--	--	--
	T2-T3	--	--	--	--	--	--
	T11-T13	--	--	--	--	--	--
	T11-T13	--	--	--	--	--	--
	T12-T13	--	--	--	--	--	--
AH-E-11B	T1-T2	5.04 mH	--	--	5.4 mH	0.180	0.163
	T1-T3	5.02 mH	--	--	5.5 mH	0.178	0.165
	T2-T3	5.05 mH	--	--	5.5 mH	0.179	0.163
	T11-T12	3.09 mH	--	--	--	0.238	--
	T11-T13	3.36 mH	--	--	3.7 mH	0.227	0.177
	T12-T13	3.50 mH	--	--	3.9 mH	0.215	--
AH-E-11C	T1-T2	--	--	--	--	Noisy circuit	
	T1-T3	--	--	--	--	Noisy circuit	
	T2-T3	--	--	--	--	Noisy circuit	
	T11-T12	--	--	--	--	Noisy circuit	
	T11-T13	--	--	--	--	Noisy circuit	
	T12-T13	--	--	--	--	Noisy circuit	

Dissipation Factor		Equivalent Series Resistance (Ohms)				DC Resistance (Ohms)	Insulation Resistance (Ohms)
		120 Hz		1 kHz			
20 Hz	1 kHz	Series	Parallel	Series	Parallel		
0.294	0.200	94.8[a]	1192	401[a]	10.43 k	38.0	$>10^{10}$
0.306	0.192	89.0[a]	1040	361[a]	10.46 k	38.0	
0.291	0.207	97.5[a]	1249	432[a]	10.51 k	38.0	
0.283	0.216	96.4[a]	1300	469[a]	10.53 k	38.88	$>10^{14}$
0.293	0.205	90.9[a]	1150	412[a]	10.21 k	38.87	
0.288	0.217	100.3	1309	464	10.31 k	38.82	
--	--	--	--	--	--	Infinity	--[i]
--	--	--	--	--	--	Infinity	--[i]
0.714	0.206	--	26	--	480	7.78	2.0×10^{7}[j]
--	--	--	--	--	--	234	5.2×10^{8}
--	0.300	--	31.0	--	290	11.25	5.0×10^{7}
--	0.438	--	--	--	50.6 k	234	6.5×10^{7}
0.672	0.291	--	--	--	--	1.73	6×10^{14}
--	--	--	--	--	--	239	5×10^{13}
--	--	--	--	--	--	0.19	1.8×10^{9}, and PI = 2.61
--	--	--	--	--	--	0.21	
--	--	--	--	--	--	0.22	
--	--	--	--	--	--	--	2.0×10^{9}, and PI = 2.4
--	--	--	--	--	--	--	
--	--	--	--	--	--	--	
0.180	0.163	0.980	--	4.00	--	0.17	1.7×10^{9}, and PI = 3.53
0.178	0.165	0.966	--	4.00	--	0.17	
0.179	0.163	0.960	--	4.00	--	0.18	
0.238	--	0.684	--	2.30	--	0.14	2.4×10^{8}, and PI = 1.0
0.227	0.177	0.758	--	2.71	--	0.14	
0.215	--	0.798	--	2.93	--	0.14	
Noisy circuit		--	--	--	--	0.17	3.0×10^{9}, and PI = 1.73
Noisy circuit		--	--	--	--	0.17	
Noisy circuit		--	--	--	--	0.17	
Noisy circuit		--	--	--	--	--	2.5×10^{9}, and PI = 1.92
Noisy circuit		--	--	--	--	--	
Noisy circuit		--	--	--	--	--	

TABLE A-1. (continued)

Device Identification Number	Test Point	Inductance/Capacitance 120 Hz Series	120 Hz Parallel	1 kHz Series	1 kHz Parallel	Dissipation Factor 120 Hz	Dissipation Factor 1 kHz
AH-E-11D	T1-T2	6.6 mH	--	--	6.0 mH	0.167	0.170
	T1-T3	6.7 mH	--	--	6.0 mH	0.150	0.180
	T2-T3	6.5 mH	--	--	6.0 mH	0.145	0.180
	T11-T12	--	--	--	--	--	--
	T11-T13	--	--	--	--	--	--
	T12-T13	--	--	--	--	--	--
AH-E-11E	T1-T2	--	--	--	--	--	--
	T1-T3	--	--	--	--	--	--
	T2-T3	--	--	--	--	--	--
	T11-T12	--	--	--	--	--	--
	T11-T13	--	--	--	--	--	--
	T12-T13	--	--	--	--	--	--
CA-V1 motor	T1-T2	260 μH[a]	306 μH	229 μH[a]	237 μH	0.419	0.179
	T1-T3	342 μH[a]	387 μH	274 μH[a]	285 μH	0.361	0.199
	T2-T3	333 μH[a]	378 μH	257 μH[a]	267 μH	0.369	0.192
CA-V1 limit switch	1-45	94 μH	--	77.9 μH	--	--	--
	1-55	--	24 nF	--	22.4 nF	0.039	0.045
	1-60	88 μH	--	77.7 μH	--	--	--
	1-70	--	24 nF	--	22.2 nF	0.057	0.045
CA-V4A motor	T1-T2	1016 μH[a]	1685 μH	1134 μH[a]	1460 μH	0.811	0.536
	T1-T3	1017 μH[a]	1689 μH	1132 μH[a]	1434 μH	0.813	0.517
	T2-T3	1034 μH[a]	1700 μH	1128 μH[a]	1495 μH	0.803	0.570
CA-V4A limit switch	1-45	3.2 μH	1.7 μH	--	177 nF	--	--
	1-55	120 μH	--	104.4 μH	--	--	--
	1-60	--	600 nF	--	--	--	--
	1-70	113 μH	--	104.7 μH	--	--	--
CA-V4B motor	T1-T2	1010 μH[a]	1672 μH	1098 μH[a]	1246 μH	0.810	0.367
	T1-T3	1013 μH[a]	1672 μH	1100 μH[a]	1248 μH	0.807	0.367
	T2-T3	1015 μH[a]	1680 μH	1100 μH[a]	1248 μH	0.809	0.367

Dissipation Factor		Equivalent Series Resistance (Ohms)				DC Resistance (Ohms)	Insulation Resistance (Ohms)
		120 Hz		1 kHz			
120 Hz	1 kHz	Series	Parallel	Series	Parallel		
0.167	0.170	--	--	--	--	0.17	2.6×10^9, and PI = 1.70
0.150	0.180	--	--	--	--	0.17	
0.145	0.180	--	--	--	--	0.18	
--	--	--	--	--	--	--	2.5×10^9, and PI = 1.35
--	--	--	--	--	--	--	
--	--	--	--	--	--	--	
--	--	--	--	--	--	--	3.0×10^9, and PI = 1.83
--	--	--	--	--	--	--	
--	--	--	--	--	--	--	
--	--	--	--	--	--	--	2.2×10^9, and PI = 2.18
--	--	--	--	--	--	--	
--	--	--	--	--	--	--	
0.419	0.179	121.0	583	--	8.31 k	37.9	$>2 \times 10^8$
0.361	0.199	113.7	816	--	8.91 k	38.0	
0.369	0.192	113.0	784	--	8.79 k	37.9	
--	--	1.476	--	1.468	--	1.493	$>10^9$
0.039	0.045	--	--	--	--	Infinity	
--	--	1.441	--	1.437	--	1.46	
0.057	0.045	--	--	--	160 k	Infinity	
0.811	0.536	621[a]	1612	--	--	352.6	5×10^{4}[j]
0.813	0.517	623[a]	1609	--	--	351.8	
0.803	0.570	626[a]	1619	--	--	351.3	
--	--	--	109	86.5	91	640 k	1500[j]
--	--	1.91	--	1.85	--	1.73	
--	--	--	328	--	288	977.9 k	
--	--	1.90	--	1.87	--	1.74	
0.810	0.367	617[a]	1571	--	--	352.0	$>2 \times 10^8$
0.807	0.367	619[a]	1585	--	--	351.0	
0.809	0.367	619[a]	1586	--	--	351.3	

TABLE A-1. (continued)

Device Identification Number	Test Point	Inductance/Capacitance 120 Hz Series	120 Hz Parallel	1 kHz Series	1 kHz Parallel	Dissipation Factor 120 Hz	Dissipation Factor 1 kHz
CA-V4B limit switch	1-45	74 μH	--	71.0 μH	--	--	--
	1-55	--	23.0 nF	--	22 nF	0.026	0.029
	1-60	77 μH	--	70.5 μH	--	--	--
	1-70	--	20.4 nF	--	19.4 nF	0.035	0.036
CF-V1A motor	T1-T2	12.17 mH	--	10.83 mH	11.6 mH	0.571	0.190
	T1-T3	12.34 mH	--	10.93 mH	11.7 mH	0.579	0.187
	T2-T3	11.64 mH	--	10.33 mH	10.9 mH	0.565	0.193
CF-V1A limit switch	1-45	178 μH	--	179.6 μH	--	--	--
	1-55	--	--	--	29.2 nF	--	0.075
	6H-60	189 μH	--	177.1 μH	--	--	--
	6H-70	--	--	--	28.9 nF	--	0.073
CF-V115 motor	T1-T2	273 mH	388 mH	--	1.74 H	0.201	--
	T1-T3	274 mH	361 mH	--	1.567 H	0.195	--
	T2-T3	281 mH	383 mH	--	2.20 H	0.209	--
CF-V115 limit switch	1-45	--	16.2 nF	--	--	1.068	--
	1-55	70 μH	--	73.8 μH	--	--	--
	1-60	--	--	--	21.7 nF	--	0.036
	1-70	69 μH	--	74 μH	--	--	--
DC-V114 motor	T1-T2	255 mH[a]	284 mH	--	435 mH	0.334	--
	T1-T3	124.2 mH	164 mH	56.2 mH	86.6 mH	0.333	--
	T2-T3	119.4 mH	157 mH	59.2 mH	89.4 mH	0.341	--
DC-V114 limit switch	1-45	104 μH	--	101.4 μH	--	--	--
	1-55	--	--	--	54.1 nF	--	0.369
	1-60	102 μH	--	100.2 μH	--	--	--
	1-70	101 μH	--	99.8 μH	--	--	--
DH-V1 motor	T1-T2	--	--	10.78 mH	11.4 mH	--	0.180
	T1-T3	12.56 mH	--	11.38 mH	12.2 mH	0.554	0.184
	T2-T3	11.72 mH	--	10.72 mH	11.3 mH	0.585	0.181
DH-V1 limit switch	45-45A	--	--	--	21.2 nF	--	0.028
	45B-55E	--	--	168.7 μH	--	--	--
	45B-60	--	--	--	30.3 nF	--	0.056
	45C-70	--	--	175.8 μH	--	--	--

Dissipation Factor		Equivalent Series Resistance (Ohms)				DC Resistance (Ohms)	Insulation Resistance (Ohms)
		120 Hz		1 kHz			
0 Hz	1 kHz	Series	Parallel	Series	Parallel		
--	--	--	--	1.49	--	1.513	$>2 \times 10^8$
0.026	0.029	--	--	--	--	Infinity	
--	--	1.46	--	1.561	--	1.34	
0.035	0.036	--	--	--	--	Infinity	
0.571	0.190	5.28	--	12.2	380	2.08	4.6×10^9, and PI = 1.2
0.579	0.187	5.27	--	12.4	377	2.08	
0.565	0.193	5.24	--	11.7	364	2.08	
--	--	--	--	2.19	--	2.15	1.2×10^7
--	0.075	--	--	--	--	Infinity	
--	--	--	--	2.83	--	2.09	
--	0.073	--	--	--	--	Infinity	
0.201	--	46.8	1.70 k	--	--	39.0	1.3×10^8, and PI = 1.0
0.195	--	43.8	1.63 k	--	--	39.05	
0.209	--	44.4	1.80 k	--	--	39.07	
1.068	--	--	9.18 k	--	--	12.7 k	$>10^8$
--	--	1418 m	--	1422 m	--	1.33	
--	0.036	--	--	--	--	Infinity	
--	--	1414 m	--	1418 m	--	1.34	
0.334	--	63[a]	629	--	--	20.40	8×10^7, and PI = 1.0
0.333	--	31.9	371	--	--	20.40	
0.341	--	31.8	349	--	--	20.41	
--	--	--	--	--	--	3.29	10^7 to 10^8
--	0.369	--	--	--	7.90 k	0.216 M	
--	--	1667 m	--	1671 m	--	1.54	
--	--	1692 m	--	1692 m	--	1.54	
--	0.180	5.21	--	11.8	397	2.18	4.8×10^9, and PI = 1.2
0.554	0.184	5.26	--	12.4	413	2.18	
0.585	0.181	5.19	--	11.7	390	2.18	
--	0.028	--	--	--	--	Infinity	$>10^8$
--	--	16.75	--	--	--	2.3	
--	0.056	--	--	--	--	Infinity	
--	--	12.56	--	--	--	2.3	

TABLE A-1. (continued)

Device Identification Number	Test Point	Inductance/Capacitance 120 Hz Series	120 Hz Parallel	1 kHz Series	1 kHz Parallel	Dissipation Factor 120 Hz	Dissipation Factor 1 kHz
DH-V2 motor	T1-T2	12.75 mH	--	11.21 mH	11.8 mH	0.610	0.144
	T1-T3	12.57 mH	--	11.08 mH	11.6 mH	0.617	0.139
	T2-T3	12.84 mH	--	11.40 mH	12.0 mH	0.545	0.135
DH-V2 limit switch	1-45	--	--	--	865 nF	--	--
	1-55	93 μH	--	80.2	--	0.141	--
	1-60	--	--	--	--	--	--
	1-70	91 μH	--	83.7 μH	--	--	--
DH-V171 motor	T1-T2	28.8 mH	52 mH	--	31.9 mH	0.381	0.214
	T1-T3	27.4 mH	45 mH	--	29.3 mH	0.383	0.195
	T2-T3	29.5 mH	53 mH	--	32.6 mH	0.380	0.219
DH-V171 limit switch	45-55A	--	--	--	--	--	--
	55B-55F	--	--	--	31.5 nF	--	0.080
	55B-60	--	--	--	--	--	--
	55C-70	--	--	--	18.1 nF	--	0.09
	8AP-8D20A	--	--	--	--	--	--
IC-V1A motor	T1-T2	--	336 mH	--	12.4 nF	--	--
	T1-T3	--	250 mH	--	18.5 nF	--	0.06
	T2-T3	--	268 mH	--	46.2 nF	--	0.002
IC-V1A limit switch	1-145	--	--	--	--	--	--
	1-155	--	--	--	--	--	--
	1-160	--	--	--	--	--	--
	1-170	--	--	--	--	--	--
	45-46	--	--	--	--	--	--
IC-V1B motor	T1-T2	--	323 mH	--	366 mH	0.298	--
	T1-T3	--	297 mH	--	339 mH	0.333	--
	T2-T3	--	336 mH	--	377 mH	0.282	--
IC-V1B limit switch	1-145	--	--	147.6 μH	--	--	1.90
	1-155	--	--	--	--	--	--
	1-160	--	--	145 μH	--	--	1.90
	1-170	--	--	--	--	--	--
	45-46	--	--	--	--	--	--
MU-V1A motor	T1-T2	103.3 mH	144 mH	96.6 mH	101.5 mH	0.402	--
	T1-T3	111.1 mH	157 mH	102.1 mH	109.0 mH	0.379	--
	T2-T3	112.3 mH	158 mH	102.4 mH	108.8 mH	0.377	--

el	Dissipation Factor		Equivalent Series Resistance (Ohms)				DC Resistance (Ohms)	Insulation Resistance (Ohms)
			120 Hz		1 kHz			
	120 Hz	1 kHz	Series	Parallel	Series	Parallel		
H	0.610	0.144	5.91	--	9.8	512	1.58	5.6×10^7, and PI = 1.2
H	0.617	0.139	5.87	--	9.3	520	1.58	
H	0.545	0.135	5.29	--	9.5	554	1.59	
	--	--	--	--	--	43	Infinity	$>10^7$
	0.141	--	14.98	--	15.05	--	1.31	
	--	--	--	43	--	32	Infinity	
	--	--	15.18	--	15.23	--	1.31	
H	0.381	0.214	10.3	103	28.0	928	2.90	3×10^{10}, and PI = 3
H	0.383	0.195	9.51	88	25.4	926	2.93	
H	0.380	0.219	10.42	105	28.5	931	2.90	
	--	--	--	--	--	--	2.21	$>10^8$
	--	0.080	--	--	--	--	Infinity	
	--	--	--	--	--	--	2.20	
	--	0.09	--	--	--	--	Infinity	
	--	--	13.8	--	2.3	--	2.21	
	--	--	--	--	--	--	33.68	1.7×10^8, and PI = 1.1
	--	0.06	30.1	--	--	--	33.28	
	--	0.002	24.5	--	--	--	33.26	
	--	--	--	--	--	--	1.96	$>10^7$
	--	--	--	--	--	--	Infinity	
	--	--	--	--	--	--	1.94	
	--	--	--	--	--	--	Infinity	
	--	--	--	--	--	--	Infinity	
	0.298	--	64.0	819	--	--	39.98	3.01×10^5J
	0.333	--	63.5	700	--	--	39.03	
	0.282	--	63.0	899	--	--	39.02	
	--	1.90	--	--	1.73	--	1.56	1500J
	--	--	--	--	--	--	37.75	
	--	1.90	--	--	1.727	--	1.55	
	--	--	--	--	--	55	53.85	
	--	--	--	--	--	95	72.97	
H	0.402	--	31.6	281	--	--	20.51	2.5×10^9, and PI = 1.0
H	0.379	--	31.9	322	--	--	20.54	
H	0.377	--	31.8	334	--	--	20.53	

TABLE A-1. (continued)

Device Identification Number	Test Point	Inductance/Capacitance 120 Hz Series	120 Hz Parallel	1 kHz Series	1 kHz Parallel	Dissipation Factor 120 Hz	Dissipation Factor 1 kHz
MU-V1A limit switch	1-45	--	--	--	22.3 nF	--	0.026
	1-55	113 μH	--	113.8 μH	--	--	--
	1-60	--	--	--	24.8 nF	--	0.005
	1-70	112 μH	--	113.9 μH	--	--	--
	155-156	--	--	--	15.13 nF	--	--
MU-V1B motor	T1-T2	111.4 mH	145 mH	49.7 mH	65.4 mH	0.387	--
	T1-T3	119.2 mH	156 mH	50.2 mH	66.7 mH	0.361	--
	T2-T3	117.2 mH	154 mH	48.4 mH	76.2 mH	0.366	--
MU-V1B limit switch	1-45	105 μH	--	98.2 μH	--	--	--
	1-55	104 μH	--	98.2 μH	--	--	--
	1-60	52.5 μF	7.38 μF	39.5 μF	740 nF	1.896	--
	1-70	105 μH	--	98.6 μH	--	--	--
	155-156	--	--	--	19.3 nF	--	0.643
MU-V2A motor	T1-T2	121.7 mH	167 mH	--	122.6 mH	0.342	--
	T1-T3	120.3 mH	163 mH	--	120.2 mH	0.350	--
	T2-T3	140.8 mH	199 mH	--	142.2 mH	0.301	--
MU-V2A limit switch	1-45	--	--	--	90.5 nF	--	--
	1-55	104 μH	--	103.6 μH	--	--	--
	1-60	--	--	--	27.9 nF	--	0.051
	1-70	103 μH	--	103.6 μH	--	--	--
MU-V2B motor	T1-T2	128.5 mH	181 mH	116.3 mH	127.9 mH	0.359	0.173
	T1-T3	112.0 mH	153 mH	102.9 mH	111.2 mH	0.404	0.165
	T2-T3	110.6 mH	149 mH	101.1 mH	109.1 mH	0.407	0.165
MU-V2B motor	1-45	--	--	--	20.8 nF	--	0.135
	1-55	109 μH	--	109.1 μH	--	--	--
	1-60	--	3.4 nF	--	32.3 nF	0.035	--
	1-70	112 μH	--	109.0 μH	--	--	--
NS-V100 motor	T1-T2	132.6 mH[a]	152 mH	109.8 mH	116.0 mH	0.383	0.157
	T1-T3	131.8 mH[a]	171 mH	120.4 mH	128.9 mH	0.353	0.171
	T2-T3	154.0 mH[a]	173 mH	122.8 mH	131.5 mH	0.348	0.173
NS-V100 limit switch (valve closed)	1-45	61 μH	--	64.9 μH	--	--	--
	1-55	--	19.3 nF	--	--	0.097	--
	1-60	61 μH	--	65 μH	--	--	--
	1-70	--	15.3 nF	--	14.77 nF	0.38	0.032

Dissipation Factor		Equivalent Series Resistance (Ohms)				DC Resistance (Ohms)	Insulation Resistance (Ohms)
		120 Hz		1 kHz			
0 Hz	1 kHz	Series	Parallel	Series	Parallel		
--	0.026	--	--	--	--	81.34 k	
--	--	2.59	--	1.84	--	1.72	
--	0.005	--	--	--	--	1.28 M	>10^8
--	--	--	--	--	--	1.72	
--	--	--	--	--	--	1.50 M	
0.387	--	32.6	294	--	--	20.37	4.5 x 10^8, and
0.361	--	32.8	335	--	--	20.44	PI = 1.32
0.366	--	32.5	327	--	--	20.41	
--	--	1564 m	--	1573 m	--	1.41	
--	--	1560 m	--	1580 m	--	1.42	
1.896	--	--	94	--	54	242.4 k	>10^8
--	--	1565 m	--	1575 m	--	1.420	
--	0.643	4.48 k	--	--	13.0 k	2.3 M	
0.342	--	31.6	389	--	--	20.5	6.5 x 10^8, and
0.350	--	31.6	371	--	--	20.49	PI = 1.0
0.301	--	31.8	516	--	--	20.48	
--	--	--	119	--	113	447 k	
--	--	2.01	--	1.85	--	1.70	>7.1 x 10^7
--	0.051	--	--	--	--	500 k	
--	--	2.14	--	1.85	--	1.69	
0.359	0.173	34.8	384	12.8	3.95 k	20.50	1.4 x 10^9, and
0.404	0.165	34.0	296	10.7	3.74 k	20.55	PI = 1.2
0.407	0.165	33.8	284	10.5	3.70 k	20.54	
--	0.135	--	--	--	--	0.52 M	
--	--	--	--	--	1.97	1.82	>10^9
0.035	--	--	--	--	--	58 M	
--	--	--	--	--	1.97	1.84	
0.383	0.157	38.27[a]	300	110	4.31 k	21.14	1.1 x 10^{10}, and
0.353	0.171	41.08[a]	368	130	4.33 k	21.14	PI = 1.30
0.348	0.173	40.39[a]	378	130	4.42 k	20.16	
--	--	1.1	--	1.1	--	1.21	
0.097	--	--	--	--	--	Infinity	10^8 to 10^9
--	--	1.08	--	1.08	--	1.21	
0.38	0.032	--	--	--	--	Infinity	

TABLE A-1. (continued)

Device Identification Number	Test Point	Inductance/Capacitance 120 Hz Series	120 Hz Parallel	1 kHz Series	1 kHz Parallel	Dissipation Factor 120 Hz	Dissipation Factor 1 kHz
NS-V100 limit switch (valve open)	1-45	--	17.3 nF	--	14.81 nF	0.012	0.040
	1-55	61 μH	--	64.8 μH	--	--	--
	1-60	--	19.1 nF	--	18.4 nF	0.092	0.036
	1-70	61 μH	--	64.5 μH	--	--	--
RC-V1 motor	T1-T2	--	76 mH	--	59.1 mH	0.309	0.158
	T1-T3	--	77 mH	--	60.2 mH	0.305	0.162
	T2-T3	--	73 mH	--	56.8 mH	0.321	0.158
RC-V1 limit switch	1-60	142 μH	--	141 μH	--	--	--
	1-70	--	--	--	--	--	--
	1-80	--	28 nF	--	23.2 nF	0.110	0.123
	46-44	148 μH	--	141 μH	--	--	--
	46-45	184 μH	--	183 μH	--	--	--
	55-56	--	--	--	0.2 pF	--	--
WDL-V7 motor	T1-T2	265 mH	443 mH	--	289 mH	0.347	0.192
	T1-T3	281 mH	456 mH	--	293 mH	0.346	0.194
	T2-T3	281 mH	458 mH	--	296 mH	0.344	0.197
WDL-V7 limit switch	1-45	--	--	--	--	--	--
	1-55	--	--	--	49.1	--	0.046
	1-60	--	--	--	--	--	--
	1-70	--	--	--	--	--	--
WDL-V22 motor	T1-T2	--	407 mH	--	--	0.493	--
	T1-T3	--	381 mH	--	--	0.484	--
	T2-T3	--	398 mH	--	--	0.500	--
WDL-V22 limit switch	1-45	112 μH	--	107 μH	--	--	--
	1-55	--	39 pF	--	36.6 nF	0.451	0.103
	1-60	110 μH	--	106.4 μH	--	--	--
	1-70	--	32 nF	--	31.5 nF	0.160	0.086
WDL-V126 motor	T1-T2	383 mH[a]	436 mH	325 mH[a]	346 mH	0.371	0.257
	T1-T3	400 mH[a]	455 mH	427 mH[a]	359 mH	0.368	0.272
	T2-T3	445 mH[a]	502 mH	360 mH[a]	391 mH	0.356	0.291
WDL-V126 limit switch	1-45	147 μH	--	145.3 μH	--	--	--
	1-55	--	52.9 nF	--	50.5	0.035	0.042
	1-60	145 μH	--	146 μH	--	--	--
	1-70	--	44.3 nF	--	42.2 nF	0.035	0.035

el	Dissipation Factor		Equivalent Series Resistance (Ohms)				DC Resistance (Ohms)	Insulation Resistance (Ohms)
			120 Hz		1 kHz			
	120 Hz	1 kHz	Series	Parallel	Series	Parallel		
nF	0.012	0.040	--	--	--	--	Infinity	10^8 to 10^9
	--	--	1.1	--	1.1	--	1.22	
nF	0.092	0.036	--	--	--	177 k	Infinity	
	--	--	1.08	--	1.08	--	1.21	
mH	0.309	0.158	11.4	186	--	--	8.70	>2 x 10^8
mH	0.305	0.162	11.3	191	--	--	8.70	
mH	0.321	0.158	11.6	192	--	--	8.65	
	--	--	1.9	--	1.9	--	1.85	2 x 10^8
	--	--	--	--	--	--	Infinity	
nF	0.110	0.123	--	--	--	55 k	Infinity	
	--	--	--	--	--	--	1.9	
	--	--	2.31	--	1.98	--	1.77	
pF	--	--	--	--	--	--	Infinity	
	0.347	0.192	--	943	--	9.38 k	38.96	9.5 x 10^8, and PI = 1.12
	0.346	0.194	--	998	--	9.47 k	38.94	
	0.344	0.197	--	989	--	9.36 k	38.94	
	--	--	1.63	--	2.48	--	2.43	>10^7
	--	0.046	--	--	--	--	Infinity	
	--	--	1.72	--	2.85	--	2.59	
	--	--	1.76	--	2.60	--	2.42	
	0.493	--	98.9	627	1.4 k	14.0 k	40.945	1.1 x 10^3[j]
	0.484	--	94.8	601	1.534 k	15.22 k	40.955	
	0.500	--	97.7	606	1.445 k	14.2 k	40.945	
	--	--	2.04 k	--	2.60 k	--	2.033	14 to 700 k[j]
F	0.451	0.103	--	--	--	80 k	89.23 k	
	--	--	2.11 k	--	2.10 k	--	2.119	
F	0.160	0.086	--	--	--	55 k	660 k	
	0.371	0.257	86.5	905	520[a]	8.39 k	39.5	2 x 10^9, and PI = 1.2
	0.368	0.272	88.5	958	569[a]	8.23 k	39.663	
	0.356	0.291	92.5	1080	647[a]	8.29 k	39.669	
	--	--	2.57	--	2.56	--	2.42	>10^8
	0.035	0.042	--	--	--	13.1 k	Infinity	
	--	--	2.56	--	2.56	--	2.42	
F	0.035	0.035	--	--	--	90 k	Infinity	

TABLE A-1. (continued)

Device Identification Number	Test Point	Inductance/Capacitance 120 Hz Series	120 Hz Parallel	1 kHz Series	1 kHz Parallel	Dissipation Factor 120 Hz	Dissipation Factor 1 kHz
WDL-V127 motor	T1-T2	380 mH[a]	435 mH	323 mH[a]	348 mH	0.381	0.280
	T1-T3	335 mH[a]	389 mH	293 mH[a]	312 mH	0.402	0.253
	T2-T3	346 mH[a]	399 mH	304 mH[a]	325 mH	0.392	0.260
WDL-V127 limit switch	1-45	175 μH	--	171 μH	--	--	--
	1-55	--	59.8 nF	--	57.0 nF	0.035	0.043
	1-60	218 μH	--	214 μH	--	--	--
	1-70	--	52.2 nF	--	49.4 nF	0.036	0.034
WDL-V271 motor	T1-T2	476 mH[a]	502 mH	455 mH[a]	476 mH	0.514	0.217
	T1-T3	482 mH[a]	608 mH	460 mH[a]	482 mH	0.510	0.217
	T2-T3	495 mH[a]	620 mH	466 mH[a]	489 mH	0.503	0.220
WDL-V271 limit switch	1-45	86 μH	--	75.3 μH	--	--	--
	1-55	--	20 nF	--	24.5 nF	0.100	0.035
	1-60	87 μH	--	76 μH	--	--	--
	1-70	--	22 nF	--	20.7 nF	0.040	0.035

a. Calculated from values obtained in the parallel mode.

b. Values obtained were not meaningful because of the presence of semiconductors in the circuit.

c. Branch circuits of H were not isolated during the test. Branch circuits were indirectly connecte low and meaningless.

d. Very high dc electric noise on the circuits.

e. PI = polarization index.

f. CT = current transformer.

g. NA = not applicable.

h. PT = potential current.

i. Not measured because of open circuit condition on armature and field circuits.

j. Measured using a multimeter.

Dissipation Factor		Equivalent Series Resistance (Ohms)				DC Resistance (Ohms)	Insulation Resistance (Ohms)
		120 Hz		1 kHz			
0 Hz	1 kHz	Series	Parallel	Series	Parallel		
0.381	0.280	91	859	558[a]	7.76 k	40.00	2.2×10^9, and PI = 1.2
0.402	0.253	86.5	718	458[a]	7.62 k	40.00	
0.392	0.260	87.7	768	492[a]	7.77 k	40.00	
--	--	2.99	--	2.98	--	2.85	$>10^8$
0.035	0.043	--	--	--	--	Infinity	
--	--	3.00	--	2.99	--	2.85	
0.036	0.034	--	--	--	74.5	Infinity	
0.514	0.217	185[a]	886	616[a]	13.7 k	102.2	4.8×10^9, and PI = 1.2
0.510	0.217	186[a]	901	621[a]	13.8 k	102.2	
0.503	0.220	188[a]	931	641[a]	13.88 k	102.2	
--	--	1.68	--	1.625	--	1.49	$>10^8$
0.100	0.035	--	--	--	--	Infinity	
--	--	1.612	--	1.607	--	1.47	
0.040	0.035	--	--	--	--	Infinity	

the circuit.

irectly connected to ground, hence, measured insulation resistance was